venttrade

PRODUCT CATALOGUE

LET US
DO IT
FOR YOU!
SOLUTIONS PROVIDED BY EXPERTS

ADDRESS

VENT TRADE SP. Z O.O.
Jaśkowa Dolina 15/15 1 st floor
80-252 Gdańsk

Product
Catalogue

Company Profile

Corporate Business
Brochure

Table of contents

01 I INTRODUCTION	4-5
02 I STRAIGHT CONDUITS SRV, SRSV	6-7
03 I SEGMENT BEND BFV90U	8-9
04 I SEGMENT BEND BFV60U	10-11
05 I SEGMENT BEND BFV45U	12-13
06 I SEGMENT BEND BFV30U	14-15
07 I SEGMENT BEND BFV15U	16-17
08 I SEGMENTED SHORT BEND BFKV90U	18-19
09 I SEGMENTED SHORT BEND BKFMV90U	20-21
10 I SEGMENT BUSHING, SYMMETRICAL RCLVU	22-23
11 I SEGMENT BUSHING, SYMMETRICAL RLVU	24-25
12 I TEE TCPVU	26-31
13 I TEE TCVU	31-33
14 I TEE TPRVU	34
15 I SADDLE COVER TSTCUV	35
16 I SADDLE COVER TSTIVU	36
17 I SADDLE COVER PSVU	37
18 I NOISE SILENCER SLV50U	38-41
19 I NOISE SILENCER SLV100U	42-45
20 I NOISE RECTANGULAR SILENCER LRCAV	46-48
21 I NOICE SILENCER PVAPVU	49
22 I ATTENUATING BEND BSLV50U, BSLV100U	50
23 I ATTENUATING BEND BSLV50U, BSLV100U	51
24 I DAMPER POJCSVU, POJCNVU, POJCRVU	52
25 I DAMPER PECSVU, PECNVU, PECRVU	53
24 I DAMPER PRCSVU, PRCNVU, PRCRVU	54-55
25 I DAMPER DTUV, DSUV	56
26 I NON-RETURN FLAP VALVE DOSVU	57
27 I STUB PIPE ILVU	58
27 I STUB PIPE WITH SCREEN AND FRAME EPNFRVU	59
28 I STUB PIPES WITH SCREEN EPNFVU	60
29 I STUB PIPE WITH NET AND NARROW EDGE EPNV	61
30 I STUB PIPE WITH NET AND NARROW EDGE EPMV	62
31 I EXTERNAL COUPLINGS MFV	63
32 I INTERNAL COUPLINGS NPVU	64
33 I KES	65
34 I PIPE STOPPERS ESVU	66
35 I AIR INTAKES CSBV	67
36 I AIR INTAKES YGCV/ALMG3	68
37 I AIR INTAKES YGCV/ALMG3	69
38I ROOF INTAKES KHV	70
39 I STUB PIPE KWV	71
40 I LAMELLA INTAKE VHLV	72
41 I INTAKE VHAVU	73
42 I WALL INTAKE CSAV	74
43 I KROOF EXHAUST HFV	75
44 I ROOF EXHAUST HNV	76
I NOTEBOOK	77-79

Introduction

Dimensional tolerances for couplers *

Ød [mm]	Tolerance [mm]	lp** [mm]	f [mm]
100	99,3-98,8	40	6
125	124,3-123,8	40	6
160	159,3-158,7	40	6
200	199,3-198,6	40	6
250	249,3-248,5	40	6
315	314,3-313,4	60	6
400	399,3-398,3	80	8
500	499,3-498,2	80	8
630	629,3-628,1	80	8
800	799,3-798,0	100	12
1000	999,3-997,9	100	12
1250	1249,3-1247,8	120	12

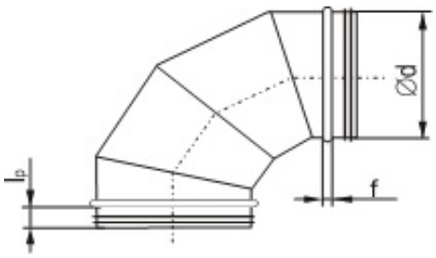

Dimensional tolerances for conduits *

Ød [mm]	Tolerance [mm]
100	100,5-100,0
125	125,5-125,0
160	160,6-160,0
200	200,7-200,0
250	250,8-250,0
315	315,9-315,0
400	401,0-400,0
500	501,1-500,0
630	631,2-630,0
800	801,6-800,0
1000	1002,0-1000,0
1250	1252,5-1250,0

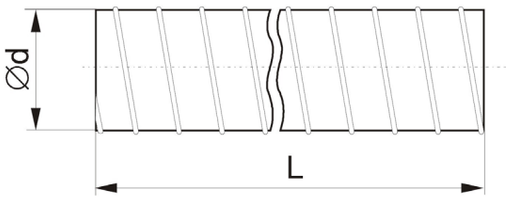

Introduction

* - According to the PN-B-03434 and PN-EN 1506 standards
* * - Nominal connection length “lp”. The real length is 5 mm less with the F-type seal mounting using Shaper machines.

Dimmensions, h,rm, s [mm]	Tolerance [mm]
≤15	0 2-
> 100 ≥ 15	0 5-
> 100	0 10-

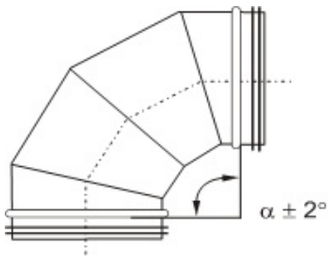

Elements are most often produced of sheet metal galvanised on both sides - no. 1.0226 (DX51D+Z275 MA-C), according to PN-EN 10142. Zinc coating weight is 275 g/m2.
If ordered elements are made of this material, its symbols are not specified in the order.

In a standard version, for stainless steel products we provide cold-rolled sheets no. 1.4301 (X5CrNi18-10), according to the PN-EN 10088. When ordering a product made of another stainless steel grade,

we ask that its symbol be specified in place of the letters “mat.”, according to the

PN-EN 10088 standard. We provide aluminium fittings of the 5754 (AlMg3) sheet,
according to the PN-EN 573. Press-formed elements are made of zinc-coated sheet.

To make damping insulation in attenuators, we use ISOVER Ultimate U MFN 16 mineral wool (max. application temp.: 400 C), and to insulate plinths - ROCKWOOL Industrial Balts Black wool (max. temp.: 250 C). The maximum application temperature for joint gaskets is 80 C.

Please, specify the colour according to the RAL palette at the end.

Straight conduits SRV, SRSV

DESCRIPTION:

Straight spiro type pipes (SRSV) from Ø250 are produced with press - formed reinforcements.

Standard length SRSV pipes made from stainless steel is 1000 mm. Standard length of delivered "spiro" type pipes is 3000 mm.

The SRV conduits may be installed using couplers (nipple), or flanges.

Characteristic dimensions of straight conduits.

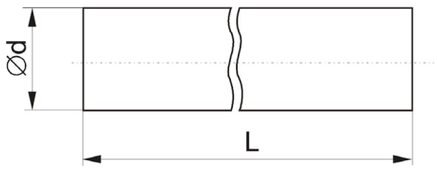

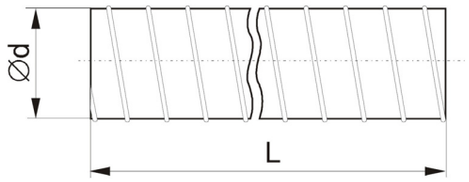

SRSV		
Ød [mm]	P ef.* [m²]	Weight** [kg/m]
100	0,008	1,7
125	0,012	2,2
160	0,020	2,7
200	0,031	3,7
250	0,049	4,3
315	0,078	7,3
400	0,126	9,2
500	0,196	11,5
630	0,312	18,1
710	0,396	20,2
800	0,503	23,0
1000	0,785	34,2
1250	1,227	43,3

SRV			
Ød [mm]	L 1000 [mm]	L=1500-1001 [mm]	L=2000-1501 [mm]
100	ZL	-	-
125	ZL	ZLS	ZLS
160	ZL	ZD	ZD
200	ZL	ZD	ZD
250	ZL	ZD	ZD
315	ZL	ZD	ZD
400	ZL	ZD	ZD
500	ZL	ZD	ZLS
630	ZL	ZD	ZLS
710	ZL	ZD	ZLS
800	ZL	ZD	ZLS
1000	ZD	ZD	-
1250	ZD	ZD	-

SRV Manufacturing:

ZL - Pressure weld along the pipe
ZD - lock along the pipe
ZLS - Pressure weld along the pipe and lock across the pipe.
* - Effective area
* * - Computational values

Relationship between pressure drops and flow rate for "spiro" type conduits.

Ordering example

SRV, SRSV - d L / mat

Product CODE
SRV – spiro duct
SRVU – spiro duct sealed

Diameter [mm]
Length [mm]

Material:
Galvanized steel DX51D+Z275 MA-C – no marking
Stainless steel X5CrNi18-10, AISI304 – 1.4301
Stainless steel X2CrNiMo17-12-2, AISI 316L – 1.4404
Aluminium alloy 5754 - AlMg3
Aluzinc – AZ185

Example: SRV-1251000; SRV-6301000/1.4404

Straight conduits SRV, SRSV

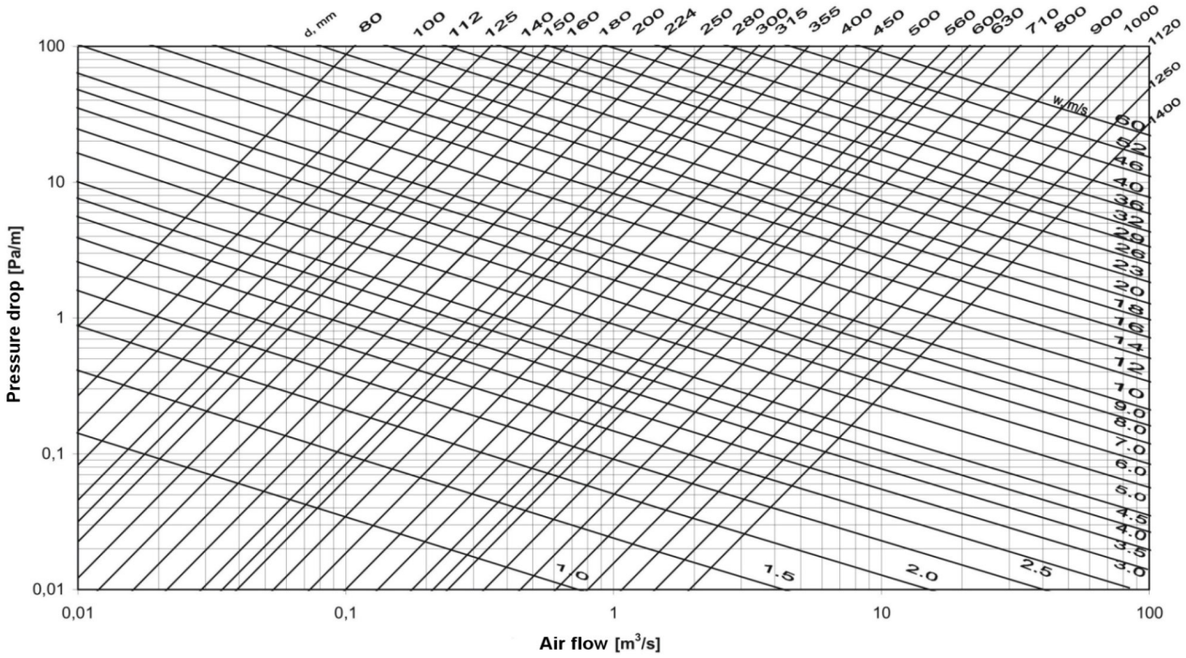

Segment bend BFV90U

DESCRIPTION:

BFV90U segment bends - 90°, with bend radiuses "rm" of 1 d, 1.5d, or 2d. They are made either with or without gasket.

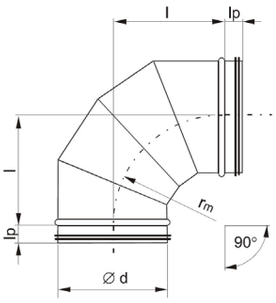

Dimensions of BFV90U segment bends.

Ød [mm]	rm = 1 d		rm = 1,5 d		rm = 2 d	
	l [mm]	Weight [kg]*	l [mm]	Weight [kg]*	l [mm]	Weight [kg]*
100	100	0,4	150	0,5	200	0,6
125	125	0,6	188	0,7	250	0,9
160	160	0,9	240	1,1	320	1,4
200	200	1,2	300	1,7	400	2,2
250	250	1,9	375	2,6	500	3,3
315	315	3,0	473	4,1	630	5,3
400	400	4,8	600	6,7	800	8,6
500	500	8,6	750	12,1	1000	15,6
630	630	13,2	945	18,7	1260	24,2
800	800	24,6	1200	35,0	1600	45,4
1000	1000	47,9	1500	68,8	2000	89,7
1250	1250	82,5	1875	118,9	2500	155,2

Relationship between pressure drops and flow rate for BFV90U segment bends.

Ordering example

BFV90U - d / mat

Product CODE
BFV90U – with gasket
BFV90 – without gasket

Diameter [mm]

Material:
Galvanized steel DX51D+Z275 MA-C – no marking
Stainless steel X5CrNi18-10, AISI304 – 1.4301
Stainless steel X2CrNiMo17-12-2, AISI 316L – 1.4404
Aluminium alloy 5754 - AlMg3
Aluzinc – AZ185

Example: BFV90U-125; BFV90U-630/AZ185

Segment bend BFV90U

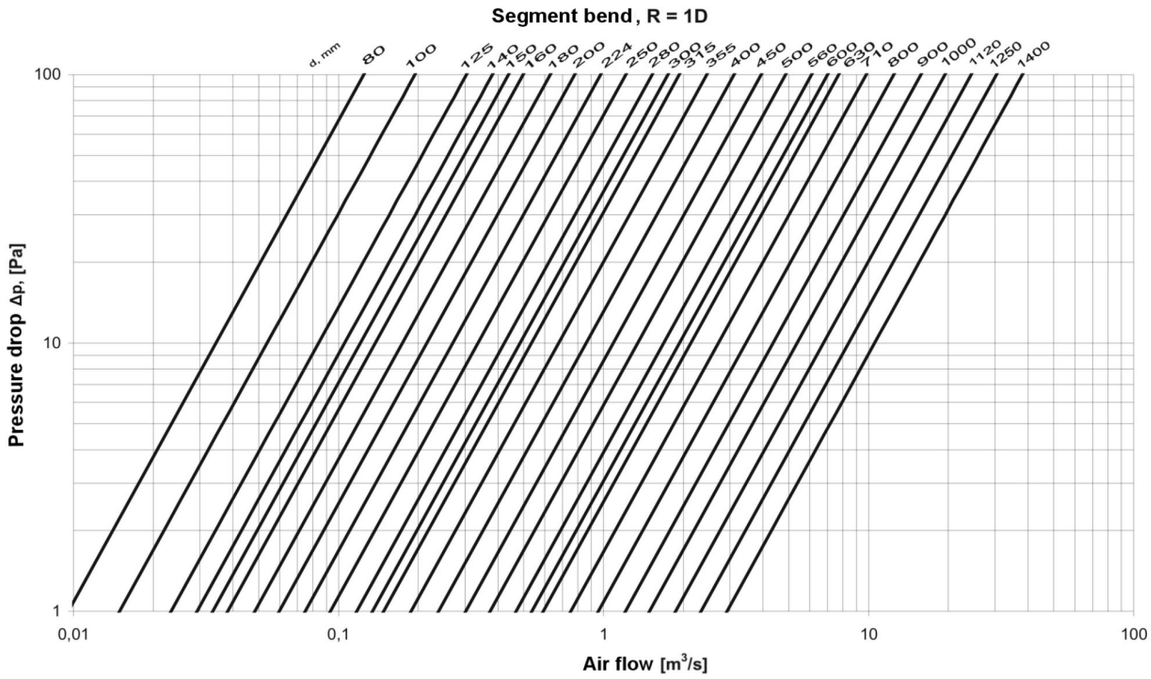

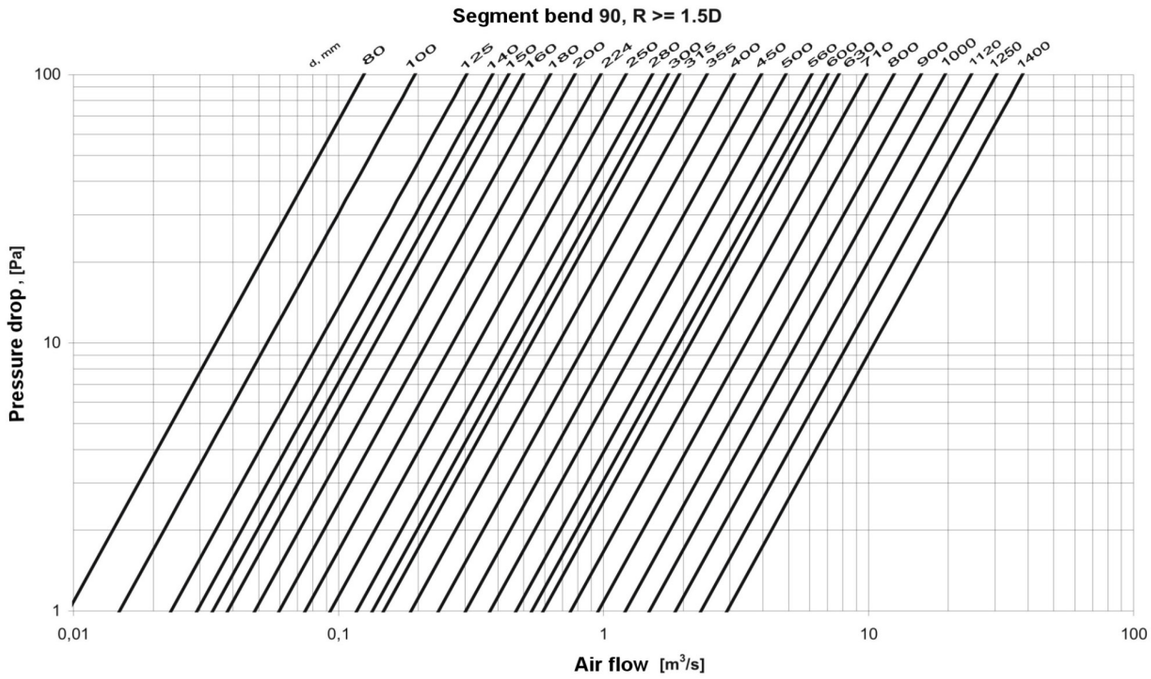

Segment bend BFV60U

DESCRIPTION:

BFV60U segment bend - 60°, with bend radiuses "rm": 1 d, 1 .5d, or 2d. They are made either with or without gasket.

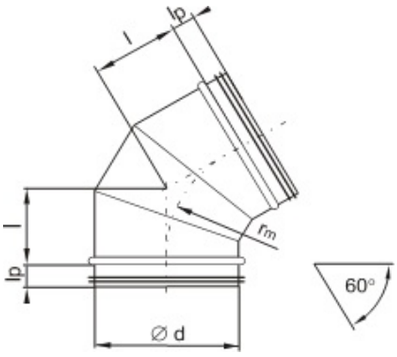

Dimensions of BFV60U segment bends.

Ød [mm]	rm = 1 d		rm = 1,5 d		rm = 2 d	
	l [mm]	Weight [kg]*	l [mm]	Weight [kg]*	l [mm]	Weight [kg]*
100	58	0,3	87	0,4	116	0,5
125	72	0,4	108	0,6	144	0,7
160	92	0,7	138	0,9	184	1,0
200	115	0,9	173	1,2	230	1,6
250	144	1,4	216	1,9	288	2,3
315	182	2,2	273	3,0	364	3,8
400	230	230	345	4,8	460	6,1
500	290	290	435	8,6	580	11,0
630	365	365	548	13,2	730	16,9
800	464	464	696	24,6	928	31,5
1000	580	580	870	47,9	1160	61,9
1250	725	725	1088	82,5	1450	106,8

Relationship between pressure drops and flow rate for BFV60U segment bends.

Ordering example

BFV60U - d / mat

Product CODE
BFV90U – with gasket
BFV90 – without gasket

Diameter [mm]

Material:
Galvanized steel DX51D+Z275 MA-C – no marking
Stainless steel X5CrNi18-10, AISI304 – 1.4301
Stainless steel X2CrNiMo17-12-2, AISI 316L – 1.4404
Aluminium alloy 5754 - AlMg3
Aluzinc – AZ185

Example: BFV60U-125; BFV60U-630/1.4404

Segment bend BFV60U

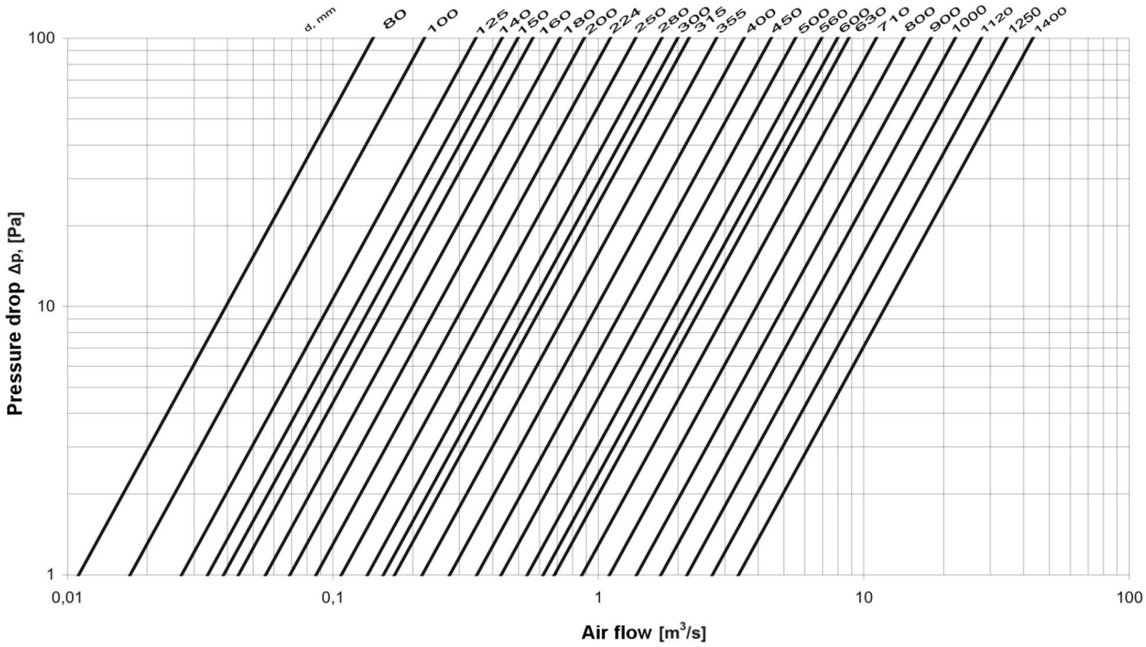

LS 60, R >= 1.5D

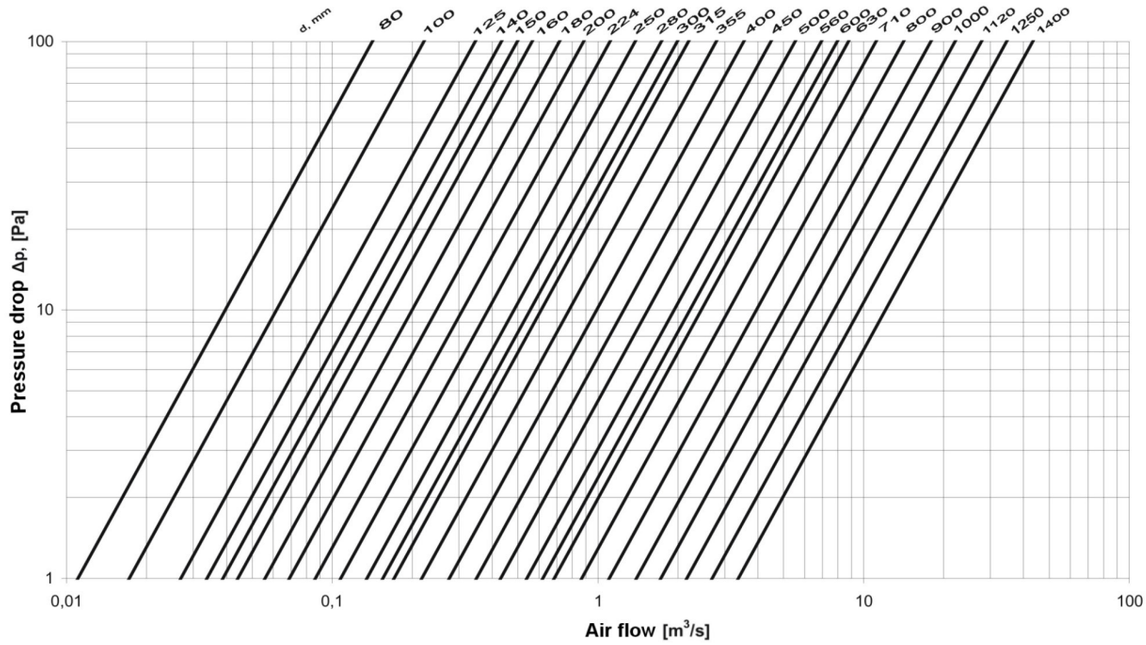

Segment bend BFV45U

DESCRIPTION:

BF45VU segment bend - 45°, with bend radiuses "rm": 1 d, 1 .5d, or 2d. They are made either with or without gasket.

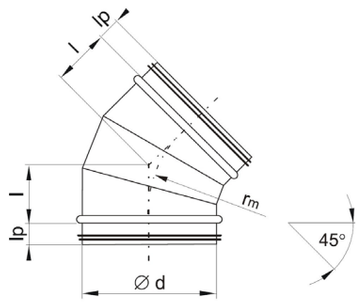

Dimensions of BFV45U segment bends.

Ød [mm]	rm = 1 d		rm = 1,5 d		rm = 2 d	
	l [mm]	Weight [kg]*	l [mm]	Weight [kg]*	l [mm]	Weight [kg]*
100	41	0,3	62	0,3	82	0,4
125	51	0,4	77	0,5	102	0,6
160	66	0,6	99	0,7	132	0,9
200	82	0,8	123	1,0	164	1,2
250	103	1,1	155	1,5	206	1,9
315	129	1,8	194	2,4	258	3,0
400	164	3,0	246	3,9	328	4,8
500	205	5,2	308	6,9	410	8,6
630	258	7,6	387	10,4	516	13,2
800	328	14,2	492	19,4	656	24,6
1000	410	27,0	615	37,5	820	47,9
1250	513	46,2	770	64,4	1026	82,5

Relationship between pressure drops and flow rate for BFV45U segment bends.

Ordering example

BFV45U - d / mat

Product CODE
BFV45U – with gasket
BFV45 – without gasket

Diameter [mm]

Material:
Galvanized steel DX51D+Z275 MA-C – no marking
Stainless steel X5CrNi18-10, AISI304 – 1.4301
Stainless steel X2CrNiMo17-12-2, AISI 316L – 1.4404
Aluminium alloy 5754 - AlMg3
Aluzinc – AZ185

Example: BFV45U-125; BFV45U-630/1.4404

Segment bend BFV45U

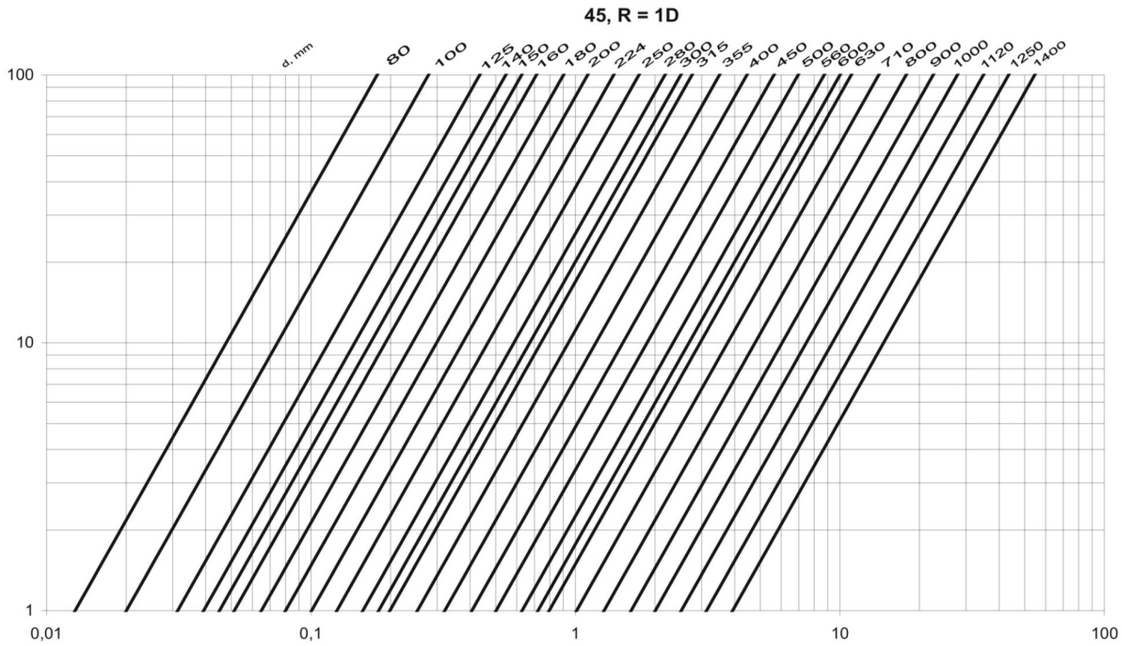

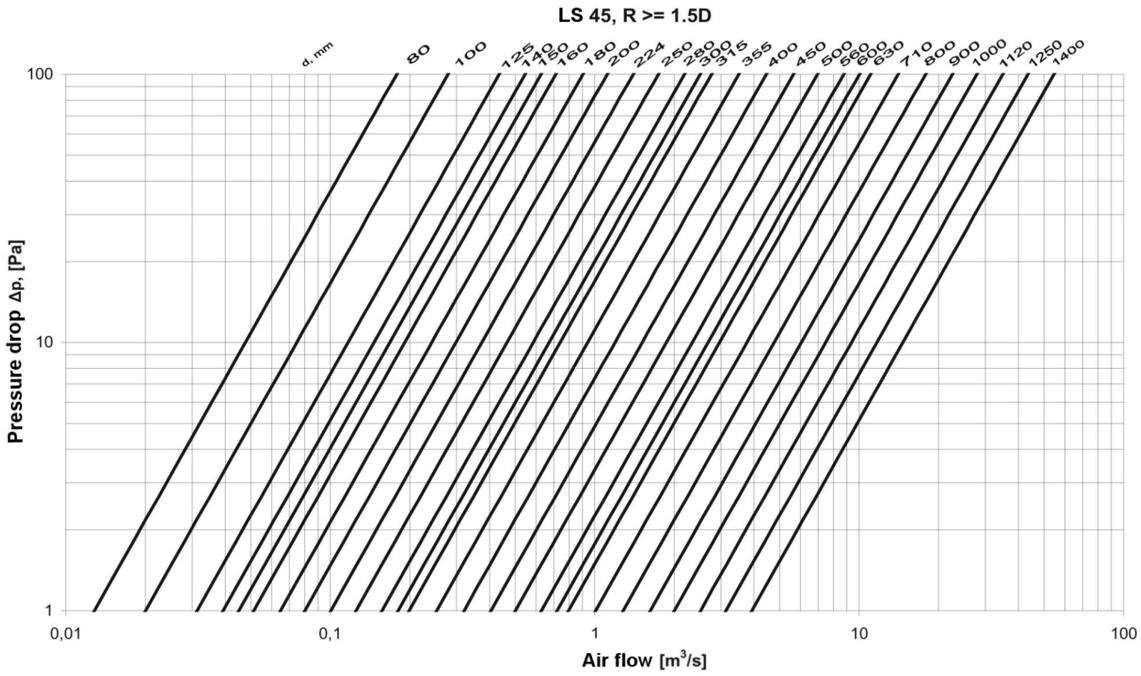

Segment bend BFV30U

DESCRIPTION:

BFV30U segment bend - 30°, with bend radiuses "rm": 1 d, 1 .5d, or 2d. They are made either with or without gasket.

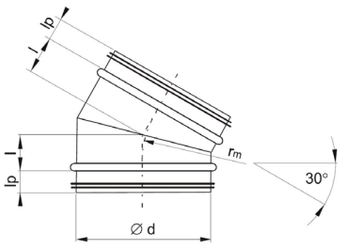

Dimensions of BFV30U segment bends.

Ød [mm]	rm = 1 d		rm = 1,5 d		rm = 2 d	
	l [mm]	Weight [kg]*	l [mm]	Weight [kg]*	l [mm]	Weight [kg]*
100	27	0,2	41	0,3	54	0,3
125	34	0,3	51	0,4	68	0,4
160	43	0,5	65	0,6	86	0,7
200	54	0,6	81	0,8	108	0,9
250	67	0,9	101	1,1	134	1,4
315	85	1,5	128	1,8	170	2,2
400	108	2,4	162	3,0	216	3,6
500	134	4,0	202	5,2	268	6,3
630	170	5,8	255	7,6	340	9,5
800	216	10,7	324	14,2	432	17,7
1000	270	20,0	405	27,0	540	34,0
1250	338	34,1	507	46,2	676	58,3

Relationship between pressure drops and flow rate for BFV30U segment bends.

Ordering example

BFV30U - d / mat

Product CODE
BFV30U – with gasket
BFV30 – without gasket

Diameter [mm]

Material:
Galvanized steel DX51D+Z275 MA-C – no marking
Stainless steel X5CrNi18-10, AISI304 – 1.4301
Stainless steel X2CrNiMo17-12-2, AISI 316L – 1.4404
Aluminium alloy 5754 - AlMg3
Aluzinc – AZ185

Example: BFV30U-125; BFV30U-630/1.4404

Segment bend BFV30U

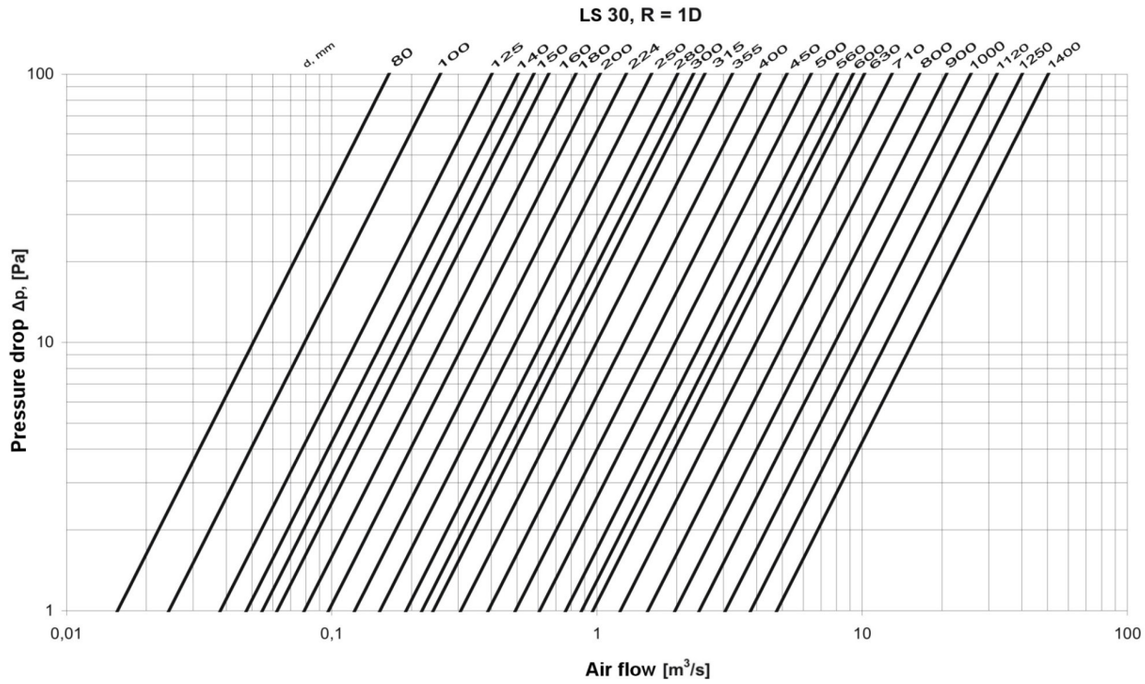

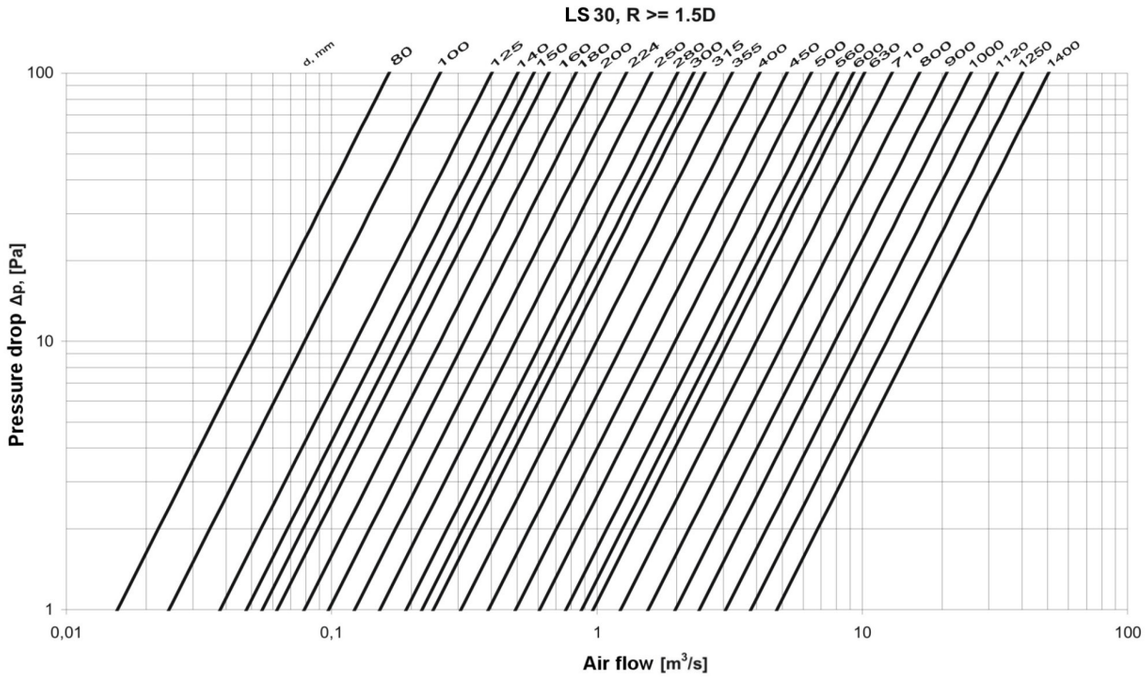

Segment bend BFV15U

DESCRIPTION:

BFV15U segment bend - 30°, with bend radiuses "rm": 1d, 1.5d, or 2d. They are made either with or without gasket.

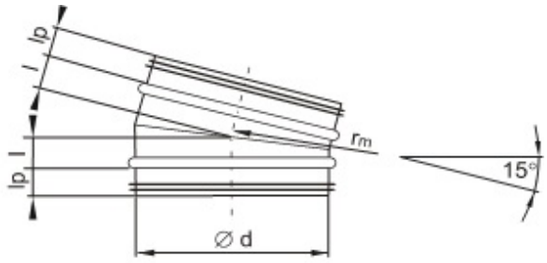

Dimensions of BFV15U segment bends.

Ød [mm]	rm = 1 d		rm = 1,5 d		rm = 2 d	
	l [mm]	Weight [kg]*	l [mm]	Weight [kg]*	l [mm]	Weight [kg]*
100	20	0,2	30	0,2	40	0,2
125	25	0,3	38	0,3	50	0,3
160	32	0,4	48	0,4	64	0,5
200	40	0,5	60	0,6	80	0,6
250	45	0,6	68	0,8	90	0,9
315	50	1,1	75	1,3	100	1,5
400	53	1,7	80	2,0	106	2,4
500	68	2,8	102	3,4	136	4,0
630	83	3,9	125	4,9	166	5,8
800	105	7,2	158	9,0	210	10,7
1000	132	13,0	198	16,5	264	20,0
1250	165	22,0	248	28,1	330	34,1

Relationship between pressure drops and flow rate for BFV15U segment bends.

Ordering example

BFV15U - d / mat

Product CODE
BFV15U – with gasket
BFV15 – without gasket

Diameter [mm]

Material:
Galvanized steel DX51D+Z275 MA-C – no marking
Stainless steel X5CrNi18-10, AISI304 – 1.4301
Stainless steel X2CrNiMo17-12-2, AISI 316L – 1.4404
Aluminium alloy 5754 - AlMg3
Aluzinc – AZ185

Example: BFV15U-125; BFV15U-630/1.4404

Segment bend BFV15U

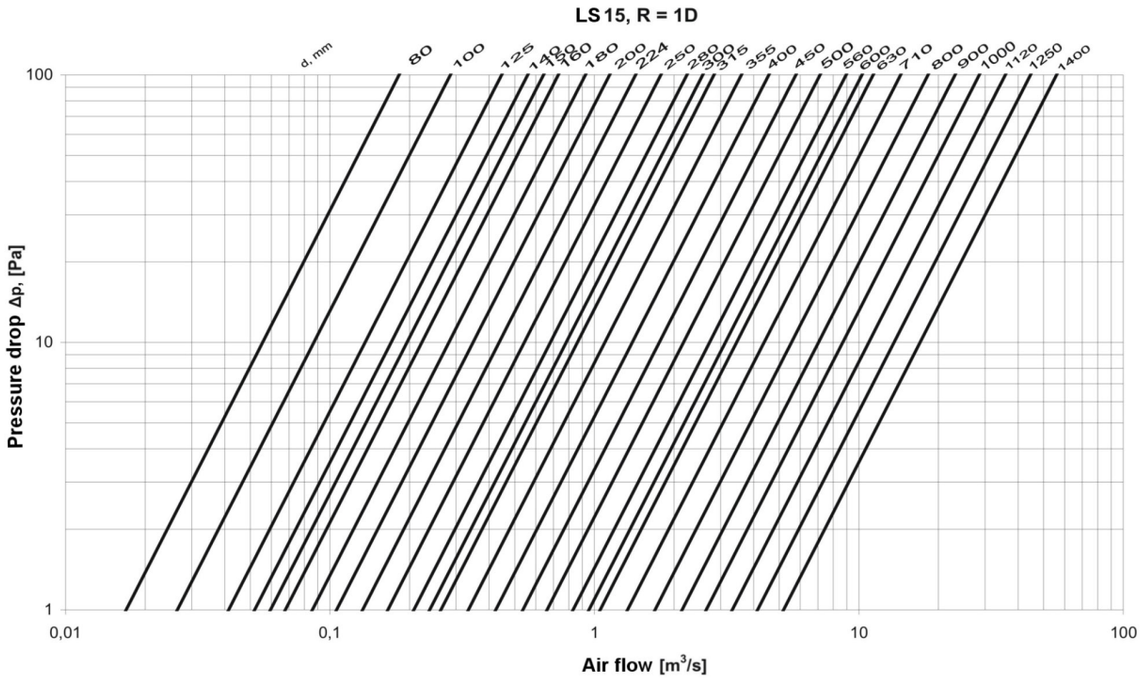

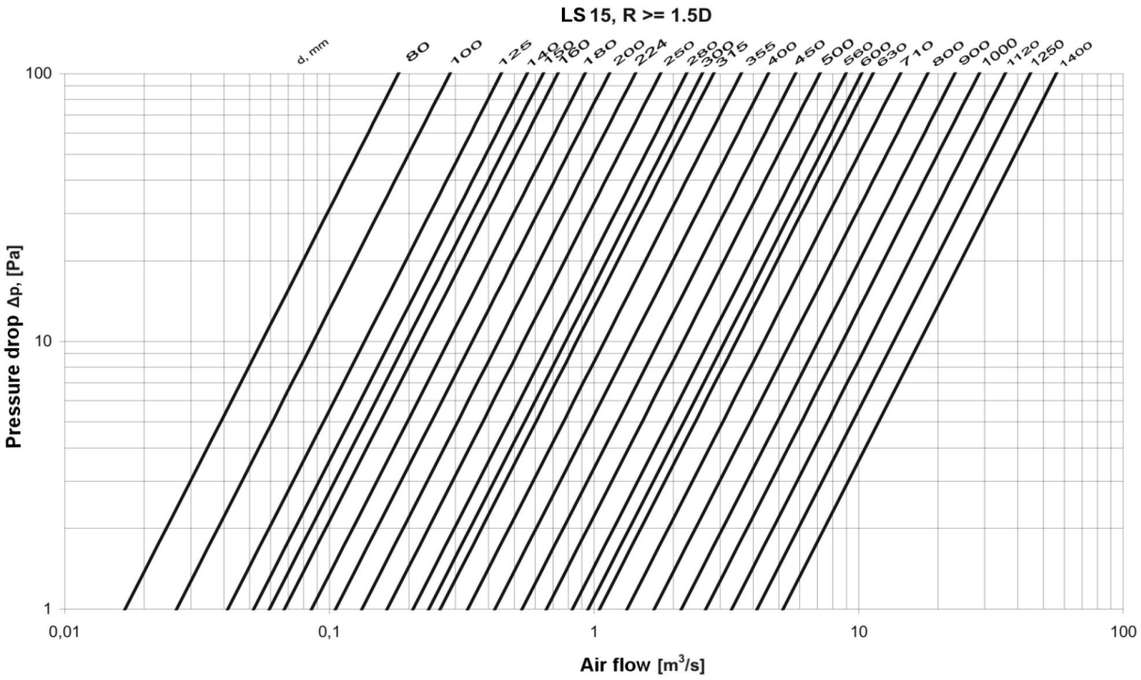

Segmented short bend BFKV90U

DESCRIPTION:

BFKV90U segmented short bend - 90°, with bend radiuses „rm": 0,6d.
They are made either with or without gasket.

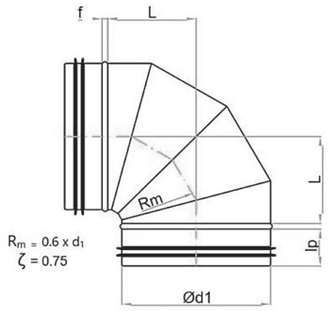

Dimensions of BFKV90U segment bends.

Ød1 80 to 160

Ød1 DN	L [mm]	Weight [kg]	Lp [mm]
100	62	0,3	40
125	77	0,4	40
160	94	0,6	40

Ød1 200 to 630

Ød1 DN	L [mm]	Weight [kg]	Lp [mm]
200	158	1,2	40
125	180	1,6	60
315	220	2.3	60
400	255	3,5	80
500	315	6,3	80
630	397	9,5	80

Ordering example

BFKV90U - d / mat

Product CODE
BFKV90U – with gasket
BFKV90 – without gasket

Diameter [mm]

Material:
Galvanized steel DX51D+Z275 MA-C – no marking
Stainless steel X5CrNi18-10, AISI304 – 1.4301
Stainless steel X2CrNiMo17-12-2, AISI 316L – 1.4404
Aluminium alloy 5754 - AlMg3
Aluzinc – AZ185

Example: BFKV90U-125; BFKV90U-630/1.4404

Relationship between pressure drops and flow rate for BFKV90U:

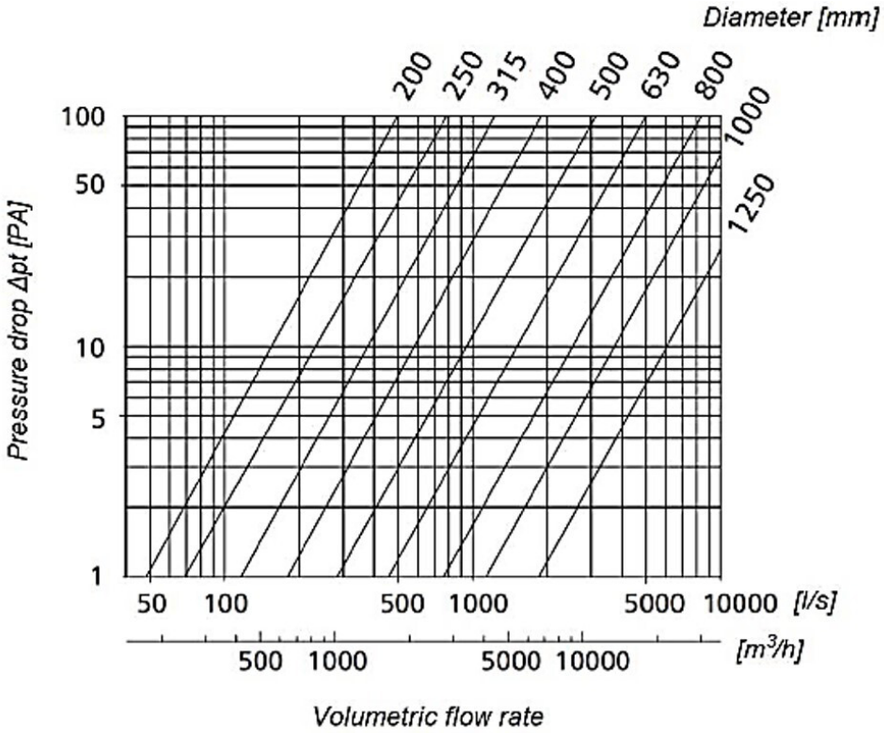

Segmented short bend BKFMV90U

DESCRIPTION:

BKFMV90U segmented short bend - 90° male-female, with bend radiuses „rm": 0,6d.
They are made either with or without gasket.

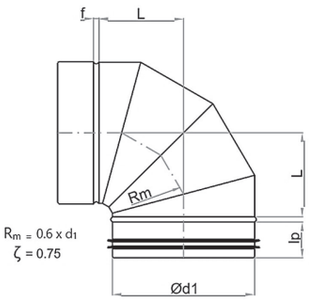

Dimensions of BFKV90U segment bends.

Ød1 80 to 630

Ød1 DN	L [mm]	Weight [kg]	Lp [mm]
100*	62	0,3	40
125	77	0,4	40
160*	94	0,6	40
200	158	1,2	40
250	180	1,6	60
315	220	2,3	60
400	255	3,5	80
500	315	6,3	80
630	397	9,5	80

Ordering example

BKFMV90U - d / mat

Product CODE
BKFMV90U – with gasket
BKFMV90 – without gasket

Diameter [mm]

Material:
Galvanized steel DX51D+Z275 MA-C – no marking
Stainless steel X5CrNi18-10, AISI304 – 1.4301
Stainless steel X2CrNiMo17-12-2, AISI 316L – 1.4404
Aluminium alloy 5754 - AlMg3
Aluzinc – AZ185

Example: BKFMV90U -125; BKFMV90U -630/1.4404

Relationship between pressure drops and flow rate for BKFMV90U:

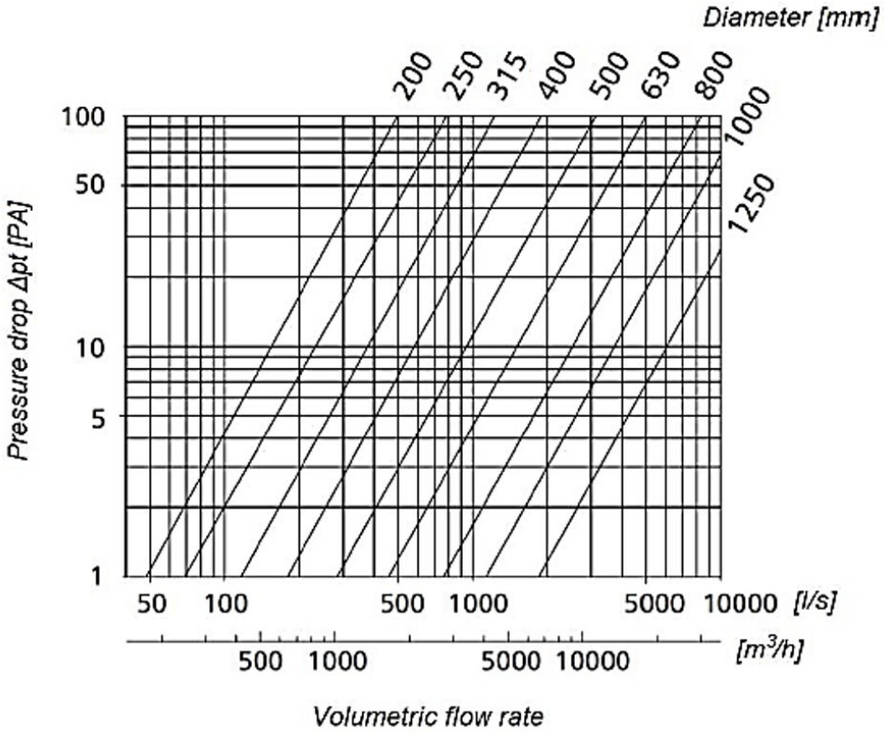

Segment bushing, symmetrical RCLVU

DESCRIPTION:

Segment bushings are made either symmetrical or asymmetrical (coaxial or out-of-line). They are available either with or without a gasket. Short bushing lc = 1/2 l

Length l depends on the bushing diameters and it doesn't need to be specified in the order.

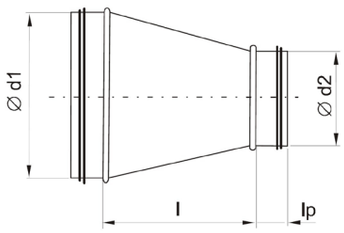

d1 [mm]	d2 [mm]	l [mm]	Weight [kg]
125	100	64	0,3
160	100	112	0,5
160	125	78	0,4
200	100	167	0,6
200	125	133	0,6
200	160	85	0,5
250	100	236	1,0
250	125	202	1,0
250	160	154	0,9
250	200	99	0,8
315	125	291	1,4
315	160	243	1,3
315	200	188	1,2
315	250	119	1,1
400	200	310	2,2
400	250	241	2,1
400	315	152	1,9

d1 [mm]	d2 [mm]	l [mm]	Weight [kg]
500	200	447	3,4
500	250	378	3,2
500	315	289	3,0
500	400	177	2,7
630	250	557	5,6
630	315	468	5,3
630	400	356	5,0
630	500	219	4,1
800	400	594	9,0
800	500	457	8,0
800	630	279	6,5
1000	500	732	16
1000	630	553	13,9
1000	800	325	11
1250	630	897	26
1250	800	668	22,9
1250	1000	393	17,8

Relationship between pressure drops and flow rate for RCLVU symmetrical bushings.

Ordering example

RCLVU - d1 d2 / mat

Product CODE
RCLVU – with gasket
RCLV – without gasket

Diameter1 [mm]
Diameter2 [mm]]

Material:
Galvanized steel DX51D+Z275 MA-C – no marking
Stainless steel X5CrNi18-10, AISI304 – 1.4301
Stainless steel X2CrNiMo17-12-2, AISI 316L – 1.4404
Aluminium alloy 5754 - AlMg3
Aluzinc – AZ185

Example: RCLVU-125100; RCLVU-630315/1.4404

Segment bushing, symmetrical RCLVU

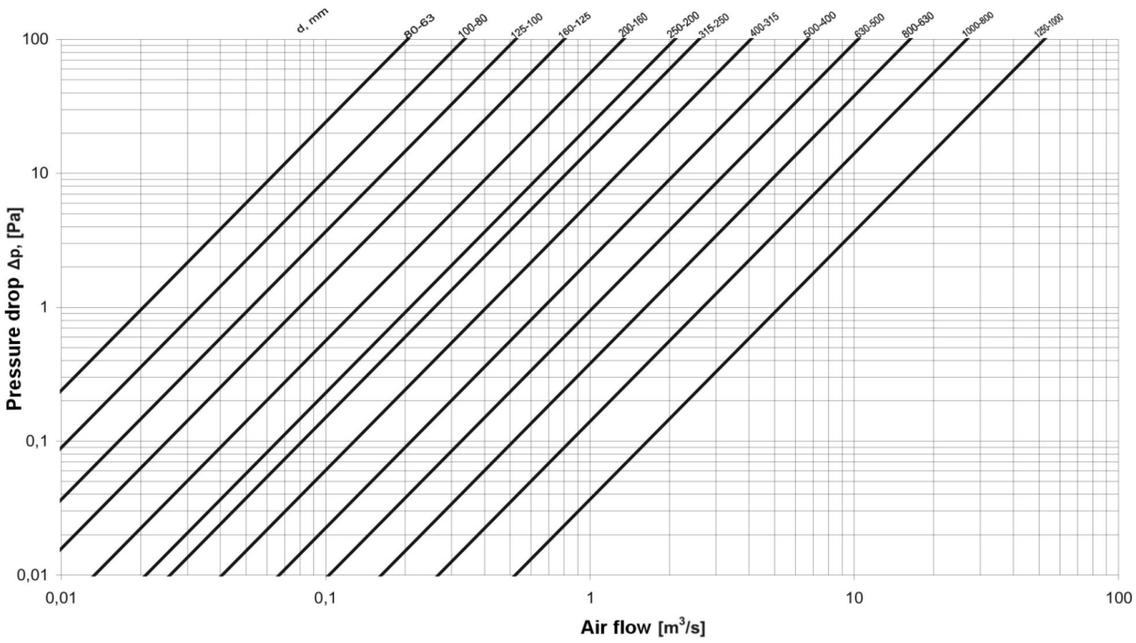

Segment bushing, symmetrical RLVU

DESCRIPTION:

Segment bushings are made symmetrical or asymmetrical (coaxial or out-of-line). They are available either with or without a gasket. Short bushing lc = 1/2 l Length l depends on bushing diameters and it doesn't need to be specified in the order.

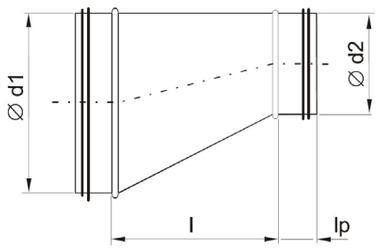

Example segment bushing dimensions.

d1 [mm]	d2 [mm]	l [mm]	Weight [kg]
125	100	64	0,3
160	100	112	0,5
160	125	78	0,4
200	100	167	0,6
200	125	133	0,6
200	160	85	0,5
250	100	236	1,0
250	125	202	1,0
250	160	154	0,9
250	200	99	0,8
315	125	291	1,4
315	160	243	1,3
315	200	188	1,2
315	250	119	1,1
400	200	310	2,2
400	250	241	2,1
400	315	152	1,9

d1 [mm]	d2 [mm]	l [mm]	Weight [kg]
500	200	447	3,4
500	250	378	3,2
500	315	289	3,0
500	400	177	2,7
630	250	557	5,6
630	315	468	5,3
630	400	356	5,0
630	500	219	4,1
800	400	594	9,0
800	500	457	8,0
800	630	279	6,5
1000	500	732	16
1000	630	553	13,9
1000	800	325	11
1250	630	897	26
1250	800	668	22,9
1250	1000	393	17,8

Relationship between pressure drops and flow rate for RLVU asymmetrical bushings.

Ordering example

RLVU - d1 d2 / mat

Product CODE
RLVU – with gasket
RLV – without gasket

Diameter1 [mm]
Diameter2 [mm]]

Material:
Galvanized steel DX51D+Z275 MA-C – no marking
Stainless steel X5CrNi18-10, AISI304 – 1.4301
Stainless steel X2CrNiMo17-12-2, AISI 316L – 1.4404
Aluminium alloy 5754 - AlMg3
Aluzinc – AZ185

Example: RLVU-125100; RLVU-630315/1.4404

Segment bushing, symmetrical RLVU

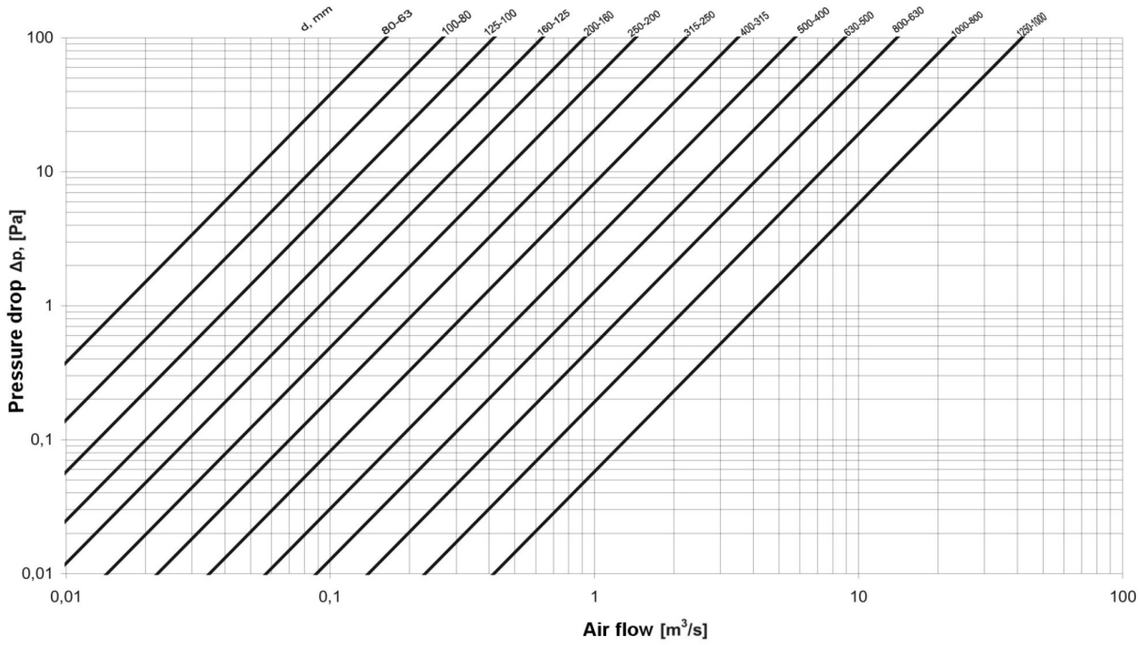

Tee TCPVU

DESCRIPTION:

Lengths of connection stubs:
Ø100 - Ø250 = 40 mm
Ø315 = 60 mm
Ø400 - Ø630 = 80 mm
Ø800 - Ø1000 = 100 mm
Ø1250 = 120 mm
h = 100 - 250 mm

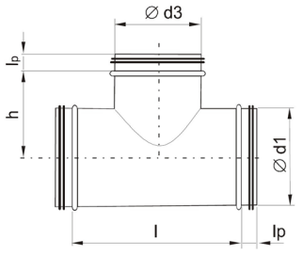

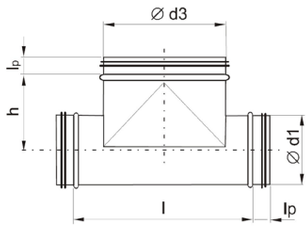

Dimensions of TCPVU tees.

Ød1 [mm]	Ød3 [mm]	l [mm]	h [mm]	Weight [kg]
100	100	130	65	0,3
100	125	225	110	0,5
100	160	260	120	0,6
125	100	132	76	0,4
125	125	166	83	0,5
125	160	197	130	0,7
125	200	237	130	0,8
160	100	130	96	0,5
160	125	166	96	0,6
160	160	210	105	0,8
160	200	300	175	1,1
160	250	350	175	1,3
200	100	130	117	0,6
200	125	166	120	0,7
200	160	210	120	0,9
200	200	250	125	1,0
200	250	350	180	1,5
200	315	415	190	2,0

Ød1 [mm]	Ød3 [mm]	l [mm]	h [mm]	Weight [kg]
250	100	130	145	0,7
250	125	166	145	0,9
250	160	210	150	1,1
250	200	250	150	1,3
250	250	300	150	1,6
250	315	395	220	2,3
250	400	500	210	2,8
315	100	130	173	0,8
315	125	165	178	1,1
315	160	210	183	1,4
315	200	250	183	1,6
315	250	300	183	1,9
315	315	366	183	2,9
315	400	500	300	3,7
315	500	600	260	4,3

Relationship between pressure drop and flow rate for tee d1 - d3.

Ordering example

TCPVU - d1 d3 / mat

Product CODE
TCPVU – with gasket
TCPV – without gasket

Diameter1 [mm]
Diameter3 [mm]]

Material:
Galvanized steel DX51D+Z275 MA-C – no marking
Stainless steel X5CrNi18-10, AISI304 – 1.4301
Stainless steel X2CrNiMo17-12-2, AISI 316L – 1.4404
Aluminium alloy 5754 - AlMg3
Aluzinc – AZ185

Example: TCPVU-125160; TCPVU-630315/1.4301

Tee TCPVU

Dimensions of TCPVU tees.

Ød1 [mm]	Ød3 [mm]	l [mm]	h [mm]	Weight [kg]
400	100	130	215	1,1
400	125	166	220	1,3
400	160	210	226	1,7
400	200	250	226	2,0
400	250	300	226	2,4
400	315	366	226	3,0
400	400	450	226	3,7
400	500	580	315	6,3
400	630	730	335	8,2
500	125	165	270	2,0
500	160	210	272	2,5
500	200	250	275	3,0
500	250	300	275	3,6
500	315	366	275	4,4
500	400	450	275	5,5
500	500	550	275	6,8
500	630	730	340	9,4
500	800	900	380	12,3
630	200	250	345	3,7
630	250	300	345	4,5
630	315	366	345	5,6
630	400	450	345	6,9
630	500	550	345	8,5
630	630	690	345	10,6
630	800	900	405	16,9
630	1000	1100	415	21,1

Ød1 [mm]	Ød3 [mm]	l [mm]	h [mm]	Weight [kg]
800	200	270	430	5,8
800	250	320	430	6,9
800	315	365	430	8,2
800	400	450	430	10,1
800	500	550	430	12,5
800	630	690	430	15,6
800	800	860	430	19,6
800	1000	1100	490	33,5
800	1250	1350	490	41,3
1000	315	365	530	13,0
1000	400	450	530	16,2
1000	500	550	530	19,9
1000	630	690	530	25,0
1000	800	860	530	31,4
1000	1000	1060	530	38,9
1000	1250	1350	590	51,0
1250	500	550	655	27,6
1250	630	690	655	34,7
1250	800	860	655	43,4
1250	1000	1060	655	53,8
1250	1250	1310	655	66,8

Tee TCPVU

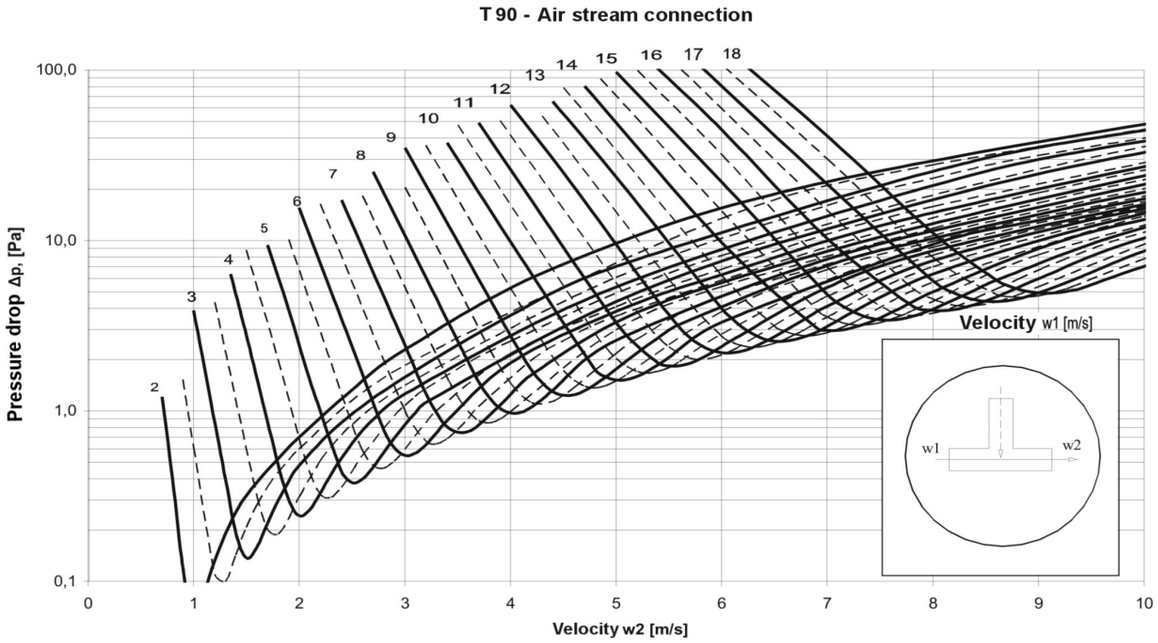
T 90 - Air stream connection
Pressure drop Δp, [Pa]
100,0
10,0
1,0
0,1
0
1
2
3
4
5
6
7
8
9
10
Velocity w2 [m/s]
2
3
4
5
6
7
8
9
10
11
12
13
14
15
16
17
18
Velocity w1 [m/s]
w1
w2

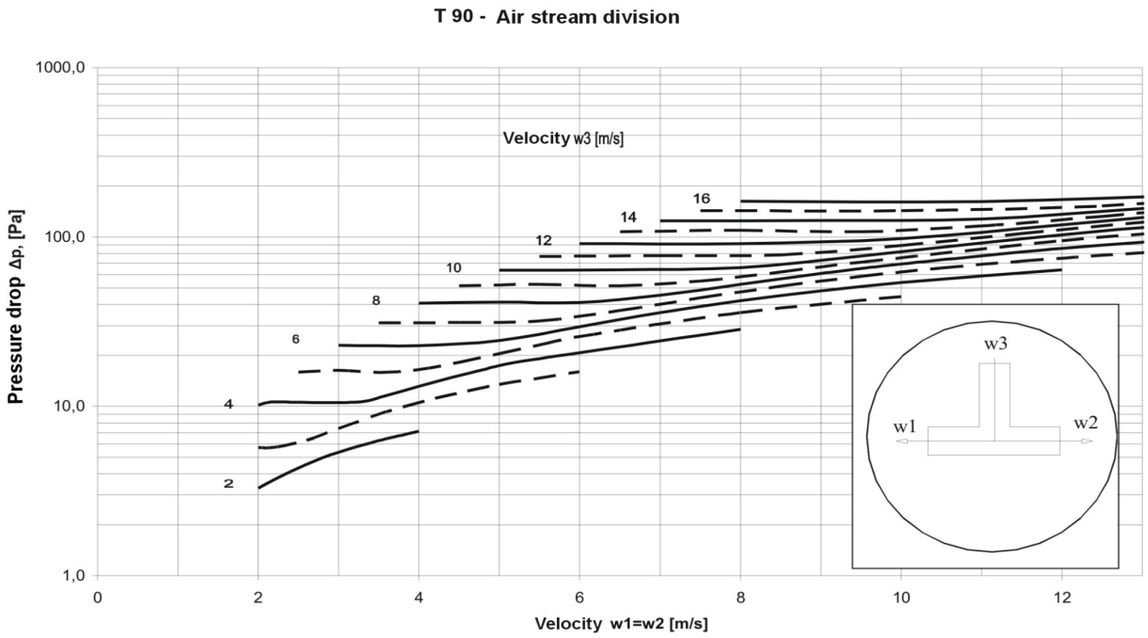
T 90 - Air stream division
Pressure drop Δp, [Pa]
1000,0
100,0
10,0
1,0
0
2
4
6
8
10
12
Velocity w1=w2 [m/s]
Velocity w3 [m/s]
2
4
6
8
10
12
14
16
w3
w1
w2

Tee TCPVU

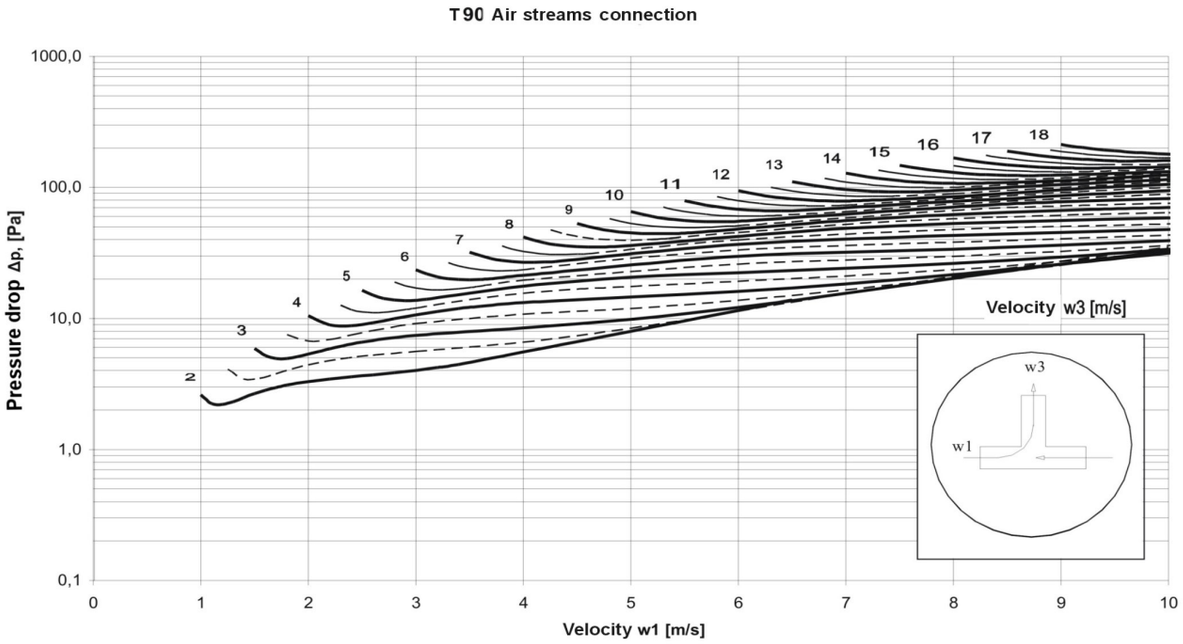
T90 Air streams connection
Pressure drop Δp, [Pa]
1000,0
100,0
10,0
1,0
0,1
0
1
2
3
4
5
6
7
8
9
10
Velocity w1 [m/s]
Velocity w3 [m/s]
w3
w1

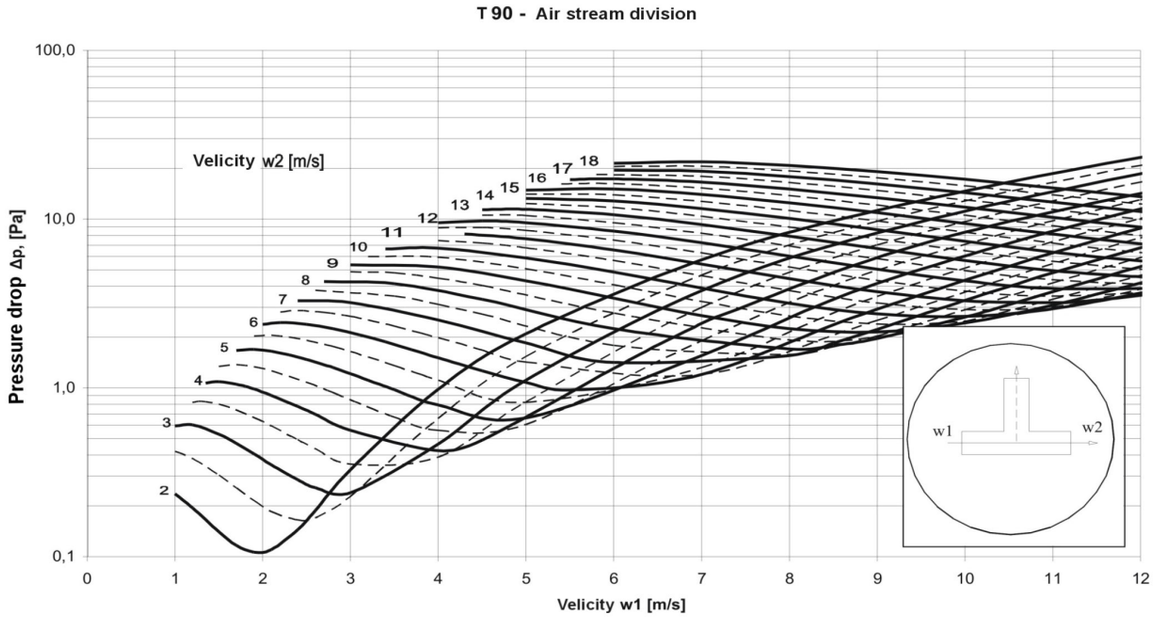
T 90 - Air stream division
Pressure drop Δp, [Pa]
100,0
10,0
1,0
0,1
0
1
2
3
4
5
6
7
8
9
10
11
12
Velicity w1 [m/s]
Velicity w2 [m/s]
w1
w2

Tee TCPVU

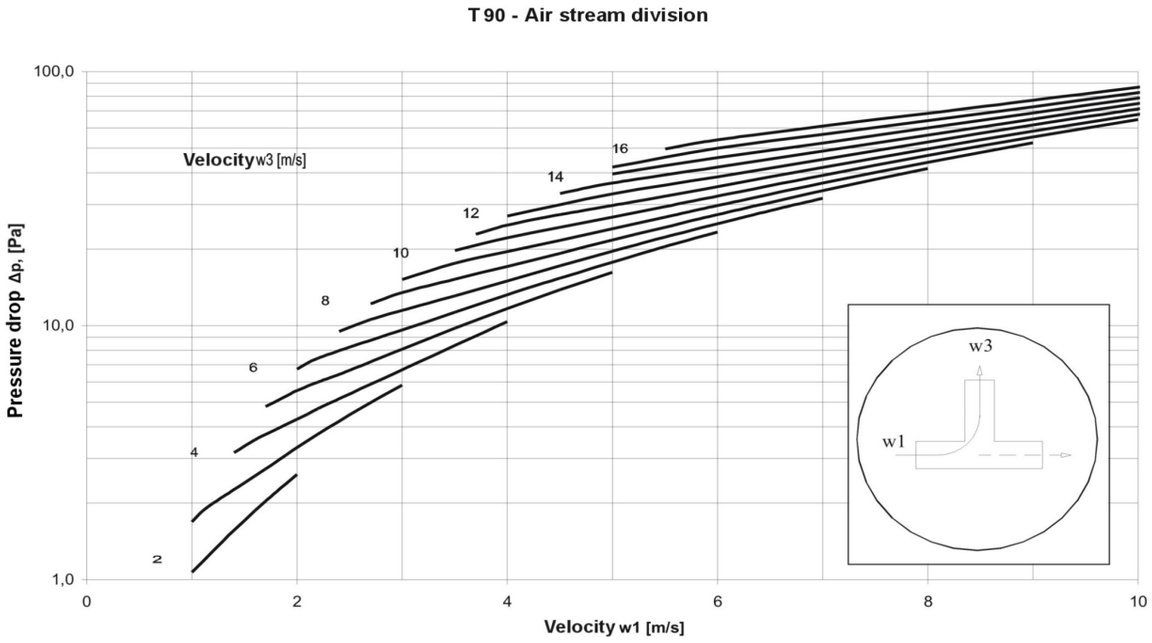
T 90 - Air stream division
Velocity w3 [m/s]
2
4
6
8
10
12
14
16
100,0
10,0
1,0
Pressure drop Δp, [Pa]
0
2
4
6
8
10
Velocity w1 [m/s]
w3
w1

Tee TCPVU

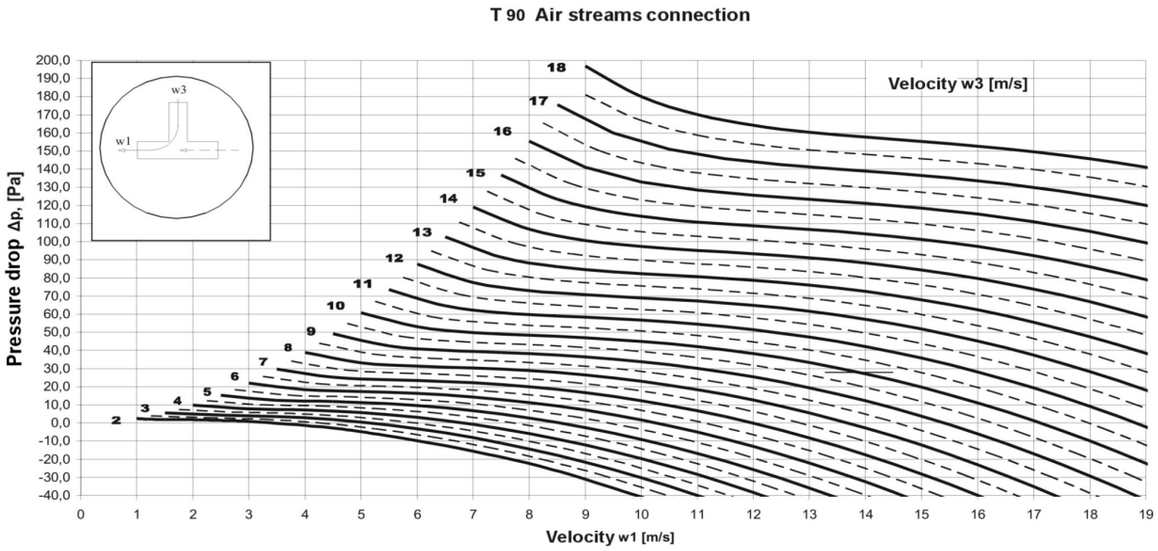
T 90 Air streams connection
Velocity w3 [m/s]
w3
w1
Pressure drop Δp, [Pa]
Velocity w1 [m/s]
2
3
4
5
6
7
8
9
10
11
12
13
14
15
16
17
18

Tee TCVU

DESCRIPTION:

T-piece with pressed take-off Ød3. Diameter Ød1 > Ø d3.
Lengths (Lp) of connection take-offs:
Ø 80 ÷ 224 = 40 mm
Ø 250 ÷ 355 = 60 mm
Ø 400 ÷ 630 = 80 mm
Length of the pressed take-off □d3:
Ø 250 i Ø 315 Lp3= 40 mm.

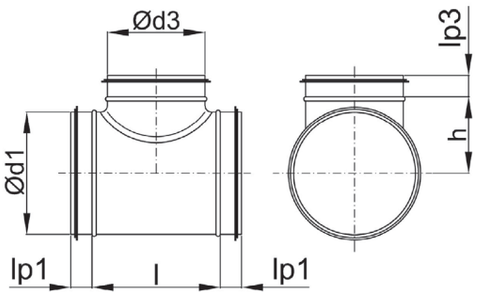

Tee TCVU

Dimensions of TCVU:

Ød1 [mm]	Ød3 [mm]	h [mm]	l [mm]	Weight [kg]
80§	80	51	0	0,31
100	80	59	150	0,37
100	100	64	180	0,45
125	80	72	150	0,51
125	100	77	180	0,52
125	125	77	200	0,64
160	80	89	150	0,61
160	100	94	180	0,63
160	125	96	200	0,74
160	160	101	250	0,92
200	80	110	150	0,80
200	100	4	180	0,84
200	125	114	200	1,00
200	160	121	250	1,20
200	200	123	310	1,40
250	80	134	150	0,96
250	100	137	180	1,00
250	125	140	200	1,20
250	160	146	250	1,40
250	200	148	310	1,80
250	250	147	380	2,10
315	80	167	150	1,20

Ød1 [mm]	Ød3 [mm]	h [mm]	l [mm]	Weight [kg]
315	100	170	180	1,30
315	125	173	200	1,50
315	160	179	250	1,70
315	200	182	310	2,10
315	250	180	380	2,60
315	315	192	430	2,90
400	100	211	170	2,70
400	125	214	210	3,00
400	160	221	250	3,10
400	200	224	300	3,10
400	250	222	378	4,10
400	315	234	450	5,20
500	100	261	180	3,00
500	125	264	200	3,30
500	160	271	250	3,70
500	200	278	300	4,10
500	250	272	370	4,80
500	315	286	450	5,20
630	100	326	180	3,50
630	125	339	200	3,90
630	160	336	250	4,40
630	200	295	300	4,90
630	250	337	370	5,90
630	315	351	450	6,30

Ordering example

TCVU - d1 d3 / mat

Product CODE
TCVU – with gasket
TCV – without gasket

Diameter1 [mm]
Diameter3 [mm]

Material:
Galvanized steel DX51D+Z275 MA-C – no marking
Stainless steel X5CrNi18-10, AISI304 – 1.4301
Stainless steel X2CrNiMo17-12-2, AISI 316L – 1.4404
Aluminium alloy 5754 - AlMg3
Aluzinc – AZ185

Example: TCVU-125160; TCVU-630315/1.4301

Tee TPRVU

DESCRIPTION:

Lengths (Lp) of connection Lp/Lp3:

Ø80 ÷ 224 = 40 mm
Ø250 ÷ 355 = 60 mm
Ø400 ÷ 630 = 80 mm

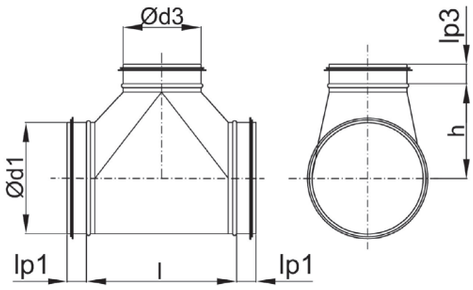

Dimensions of TPRVU:

Ød1 [mm]	Ød3 [mm]	h [mm]	l [mm]
100	100	60	180
100	125	85	205
100	160	90	250
100	200	95	300
100	250	105	370
125	125	75	200
125	160	83	250
125	200	108	300
125	250	118	370
125	315	128	455
160	160	96	250
160	200	125	300
160	250	135	370
160	315	145	455
200	200	125	310
200	250	155	370
200	315	165	455
200	400	180	570
250	250	155	380

Ød1 [mm]	Ød3 [mm]	h [mm]	l [mm]
250	315	190	455
250	400	215	570
250	500	220	700
315	315	178	430
315	400	240	570
315	500	275	700
315	630	273	870
400	400	280	570
400	500	295	700
400	630	315	870
500	400	330	570
500	500	345	700
500	630	365	870
500	800	395	1090
630	400	400	570
630	500	410	700
630	630	430	870
630	710	445	970
630	800	460	1090

Ordering example

TPRVU - d1 d3 / mat

Product CODE
TPRVU – with gasket
TPRV – without gasket

Diameter1 [mm]
Diameter3 [mm]]

Material:
Galvanized steel DX51D+Z275 MA-C – no marking
Stainless steel X5CrNi18-10, AISI304 – 1.4301
Stainless steel X2CrNiMo17-12-2, AISI 316L – 1.4404
Aluminium alloy 5754 - AlMg3
Aluzinc – AZ185

Example: TPRVU-125160; TPRVU-630315/1.4301

Saddle cover TSTCUV

DESCRIPTION:

TSTCUV saddle covers - symmetrical.
Cover axis crosses conduit axis. h = 100 - 250 mm

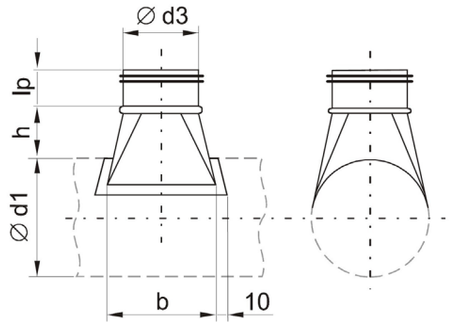

Example dimensions of TSTCVU saddle covers.

Ød1 [mm]	Ød3 [mm]	l [mm]	Weight [kg]
100	100	190	0,2
125	100	190	0,2
125	125	215	0,3
160	100	190	0,2
160	125	215	0,3
160	160	260	0,4
200	100	190	0,2
200	125	215	0,3
200	160	260	0,4
200	200	285	0,6
250	100	190	0,2
250	125	215	0,3
250	160	260	0,4
250	200	330	0,6
250	250	380	1,0
315	100	190	0,2
315	125	215	0,3
315	160	260	0,4
315	200	330	0,6
315	250	380	1,1
315	315	465	1,5

Ød1 [mm]	Ød3 [mm]	l [mm]	Weight [kg]
400	100	190	0,2
400	125	215	0,3
400	160	260	0,4
400	200	330	0,6
400	250	380	1,1
400	315	465	1,5
400	400	570	2,4
500	125	215	0,3
500	160	260	0,4
500	200	330	0,6
500	250	380	1,1
500	315	465	1,6
500	400	570	2,4
630	200	330	0,6
630	250	380	1,1
630	315	465	1,6
630	400	570	2,5

Ordering example

TSTCVU - d1 d3 / mat

Product CODE
TSTCUV – with gasket
TSTCV – without gasket

Diameter1 [mm]
Diameter3 [mm]

Material:
Galvanized steel DX51D+Z275 MA-C – no marking
Stainless steel X5CrNi18-10, AISI304 – 1.4301
Stainless steel X2CrNiMo17-12-2, AISI 316L – 1.4404
Aluminium alloy 5754 - AlMg3
Aluzinc – AZ185

Example: TSTCUV-315160; TSTCUV-630315/1.4301

Saddle cover TSTIVU

DESCRIPTION:

TSTIVU saddle covers - asymmetrical.
Cover axis is shifted relative to conduit axis.
h = 100 - 250 mm

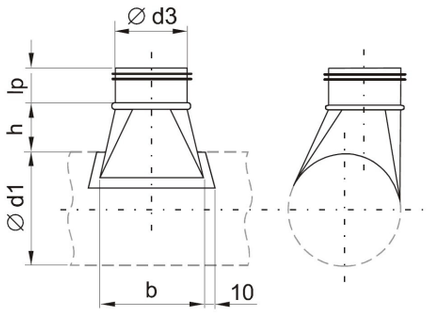

Example dimensions of TSTIVU saddle covers.

Ød1 [mm]	Ød3 [mm]	l [mm]	Weight [kg]
100	100	190	0,2
125	100	190	0,2
125	125	215	0,3
160	100	190	0,2
160	125	215	0,3
160	160	260	0,4
200	100	190	0,2
200	125	215	0,3
200	160	260	0,4
200	200	285	0,6
250	100	190	0,2
250	125	215	0,3
250	160	260	0,4
250	200	330	0,6
250	250	380	1,0
315	100	190	0,2
315	125	215	0,3

Ød1 [mm]	Ød3 [mm]	l [mm]	Weight [kg]
315	160	260	0,4
315	200	330	0,6
315	250	380	1,1
315	315	465	1,5
400	100	190	0,2
400	125	215	0,3
400	160	260	0,4
400	200	330	0,6
400	250	380	1,1
400	315	465	1,5
400	400	570	2,4
500	125	215	0,3
500	160	260	0,4
500	200	330	0,6
500	250	380	1,1
500	315	465	1,6
500	400	570	2,4
630	200	330	0,6
630	250	380	1,1
630	315	465	1,6
630	400	570	2,5

Ordering example

TSTIVU - d1 d3 / mat

Product CODE
TSTIVU – with gasket
TSTIV – without gasket

Diameter1 [mm]
Diameter3 [mm]]

Material:
Galvanized steel DX51D+Z275 MA-C – no marking
Stainless steel X5CrNi18-10, AISI304 – 1.4301
Stainless steel X2CrNiMo17-12-2, AISI 316L – 1.4404
Aluminium alloy 5754 - AlMg3
Aluzinc – AZ185

Example: TSTIVU-315160; TSTIVU-630315/1.4301

Saddle cover PSVU

DESCRIPTION:

PSVU saddle cover is symmetrical.

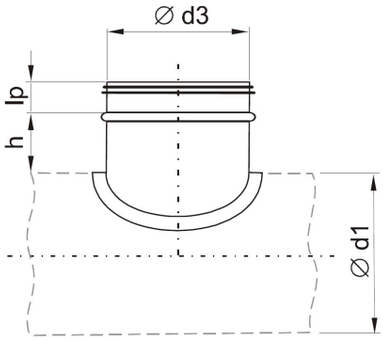

Example dimensions of PSVU saddle covers.

Ød1 [mm]	Ød3 [mm]	h [mm]	Weight [kg]
100	100	60	0,2
125	100	60	0,2
125	125	60	0,3
160	100	60	0,2
160	125	60	0,3
160	160	60	0,4
200	100	60	0,2
200	125	60	0,3
200	160	60	0,3
200	200	60	0,5
250	100	60	0,2
250	125	60	0,2
250	160	60	0,4
250	200	60	0,5
250	250	60	0,9
315	100	60	0,2
315	125	60	0,2
315	160	60	0,3
315	200	60	0,5
315	250	60	0,7
315	315	60	1,1
400	100	60	0,2
400	125	60	0,3
400	160	60	0,3
400	200	60	0,5

Ød1 [mm]	Ød3 [mm]	l [mm]	Weight [kg]
400	250	60	0,7
400	315	60	1,0
400	400	90	1,3
450	125	60	0,3
450	160	60	0,3
450	200	60	0,5
450	250	60	0,7
450	315	60	0,9
450	400	90	1,7
500	125	60	0,3
500	160	60	0,3
500	200	60	0,5
500	250	60	0,7
500	315	60	0,9
500	400	90	1,7
630	200	60	0,5
630	250	60	0,5
630	315	60	1,0
630	400	90	1,7

Ordering example

PSVU - d1 d3 / mat

Product CODE
PSVU – with gasket
PSV – without gasket

Diameter1 [mm]
Diameter3 [mm]

Material:
Galvanized steel DX51D+Z275 MA-C – no marking
Stainless steel X5CrNi18-10, AISI304 – 1.4301
Stainless steel X2CrNiMo17-12-2, AISI 316L – 1.4404
Aluminium alloy 5754 - AlMg3
Aluzinc – AZ185

Example: PSVU-315160; PSVU-630315/1.4301

Noise silencer SLV50U

DESCRIPTION:

SLV50U silencer is designed for mounting in Spiro and B1 type installations. The attenuator housing is made of zinc-coated steel sheet. Mineral wool protected with perforated sheet is used as sound absorbing material. In a standard version, SLV50U attenuators are equipped with gaskets.

wt - attenuating layer. Glass wool insulation.

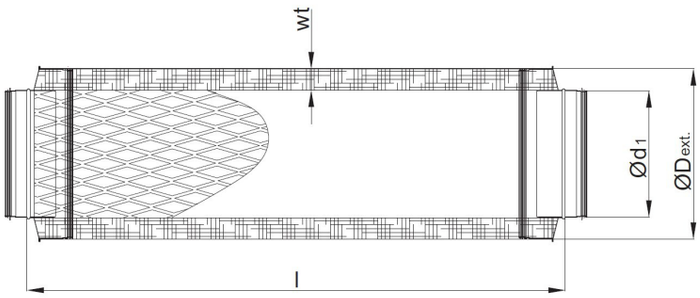

Range of SLV50U silencers with 50 mm insulation.

Type		Ød1 [mm]	ØD ext. [mm]	Insulation thickness [mm]	L [mm]	Weight [kg]*
SLVU	100/50	98	200	50	300/600/900/1200	2,0/3,2/4,3/5,5
SLVU	125/50	123	224	50	300/600/900/1200	2,3/3,7/5,0/6,3
SLVU	160/50	158	250	50	300/600/900/1200	2,8/4,3/5,9/7,4
SLVU	200/50	198	300	50	300/600/900/1200	3,5/5,3/7,2/9,0
SLVU	250/50	248	400	50	300/600/900/1200	4,4/6,6/8,8/11,0
SLVU	315/50	313	400	50	600/900/1200	8,1/10,6/13,1
SLVU	400/50	398	500	50	600/900/1200	11,2/14,7/18,2
SLVU	500/50	498	600	50	600/900/1200	13,8/18,0/22,2
SLVU	630/50	628	710	50	600/900/1200	19,3/25,1/30,8

Example hydraulic resistances of attenuators, length l = 900 mm.

Ordering example

SLV50U - d L / mat

Product CODE
SLV50U – with gasket
SLV50 – without gasket

50 – thickness of insulation wt

Diameter1 [mm]
Length [mm]

Material:
Galvanized steel DX51D+Z275 MA-C – no marking
Stainless steel X5CrNi18-10, AISI304 – 1.4301
Aluminium alloy 5754 - AlMg3

Example: SLV50U-125 1200; SLV50U-160300/1.4301

Noise silencer SLV50U

Range of SLV50U silencers with 50 mm insulation.

			Octave band (Hz)									Mean total pressure loss coefficient
DN	D	L	63	125	250	500	1000	2000	4000	8000	Weight	
	(mm)	(mm)	Insertion attenuation (dB)								kg	(ζ/m)
80	180	300	4	8	8	11	27	47	43	15	1,5	0,374
80	180	600	4	9	13	22	38	50	45	24	2,6	
80	180	900	4	11	22	42	49	50	48	33	3,6	
80	180	1200	4	13	31	50	50	50	50	42	4,8	
100	200	300	3	8	7	11	25	37	36	12	1,7	0,286
100	200	600	4	9	11	19	33	45	40	19	3	
100	200	900	4	10	15	28	44	50	44	27	4,2	
100	200	1200	4	10	20	37	48	50	48	34	5,5	
125	180	300	3	4	7	11	15	14	14	11	1,5	0,22
125	180	600	4	6	10	19	28	33	25	18	2,5	
125	180	900	4	9	14	27	42	50	35	24	3,7	
125	180	1200	4	11	17	36	46	50	46	31	4,8	
140	250	300	3	4	6	10	14	12	14	10	2,2	0,163
140	250	600	3	6	12	18	27	32	24	14	3,8	
140	250	900	3	8	13	26	43	47	34	20	5,4	
140	250	1200	3	10	16	34	43	47	43	29	7,1	
150	250	300	2	4	6	10	13	11	14	10	2,4	0,176
150	250	600	3	5	12	18	27	32	24	14	4,1	
150	250	900	3	8	13	26	43	47	34	20	5,8	
150	250	1200	3	10	16	34	43	47	43	29	7,6	
160	250	300	1	2	5	9	17	14	16	8	2,3	0,163
160	250	600	2	4	8	16	26	26	23	10	4	
160	250	900	3	5	11	23	35	39	30	12	5,7	
160	250	1200	4	6	15	30	44	50	38	14	7,4	
180	280	300	1	2	4	8	12	12	9	5	2,6	0,14
180	280	600	2	4	8	16	24	23	18	10	4,5	
180	280	900	2	5	11	24	36	35	27	12	6,4	
180	280	1200	3	6	15	29	43	46	36	14	8,3	

Noise silencer SLV50U

Range of SLV50U silencers with 50 mm insulation.

			Octave band (Hz)									Mean total pressure loss coefficient
DN	D	L	63	125	250	500	1000	2000	4000	8000	Weight	
	(mm)	(mm)	Insertion attenuation (dB)								kg	(ζ/m)
200	300	300	1	2	5	12	11	10	10	9	2,9	0,123
200	300	600	1	3	7	16	22	20	13	10	4,9	
200	300	900	1	5	10	19	32	31	16	11	6,9	
200	300	1200	2	6	12	22	42	41	20	13	8,9	
224	315	300	1	1	4	10	11	10	7	7	3,2	0,108
224	315	600	1	2	7	15	21	18	11	8	5,5	
224	315	900	1	4	10	18	29	26	15	10	7,7	
224	315	1200	2	5	12	22	38	34	19	12	10	
250	355	300	0	1	3	8	10	9	4	4	3,8	0,095
250	355	600	1	2	6	13	19	15	8	6	6,5	
250	355	900	1	3	9	17	26	21	13	8	9,2	
250	355	1200	2	4	12	21	34	27	17	10	12	
280	400	300	0	1	2	6	7	7	3	3	4,3	0,081
280	400	600	1	1	4	12	14	11	6	4	7,3	
280	400	900	1	2	7	16	25	20	10	5	10,3	
280	400	1200	2	3	9	21	32	26	16	7	13,4	
300	400	300	0	1	2	6	7	4	2	2	4	0,074
300	400	600	0	1	4	10	13	9	5	4	8	
300	400	900	1	2	4	15	22	18	8	7	11	
300	400	1200	1	2	7	12	20	16	10	6	14,4	
315	400	300	0	1	2	7	7	1	1	1	3,8	0,069
315	400	600	0	1	4	10	12	7	4	4	8	
315	400	900	1	2	6	15	21	15	8	7	11,3	
315	400	1200	1	3	7	2	27	22	13	10	14,6	
355	450	600	0	1	4	10	12	6	3	3	10,1	0,061
355	450	900	1	2	6	14	18	12	6	5	13,4	
355	450	1200	1	3	7	19	23	17	8	6	16,7	
400	500	600	0	1	4	10	11	5	1	2	10,5	0,052
400	500	900	1	2	5	13	15	8	3	2	14,6	
400	500	1200	1	2	7	16	20	11	4	3	18,6	

Noise silencer SLV50U

Octave band (Hz)												Mean total pressure loss coefficient
DN	D	L	63	125	250	500	1000	2000	4000	8000	Weight	
	(mm)	(mm)	Insertion attenuation (dB)								kg	(ζ/m)
450	560	600	0	1	4	9	10	4	2	2	11,9	0,048
450	560	900	1	2	5	13	14	6	3	2	16,4	
450	560	1200	1	2	6	16	19	8	4	3	21	
500	600	600	0	1	3	8	9	2	3	2	12,8	0,039
500	600	900	1	2	5	12	14	3	4	2	17,8	
500	600	1200	1	2	6	16	18	4	5	3	22,8	

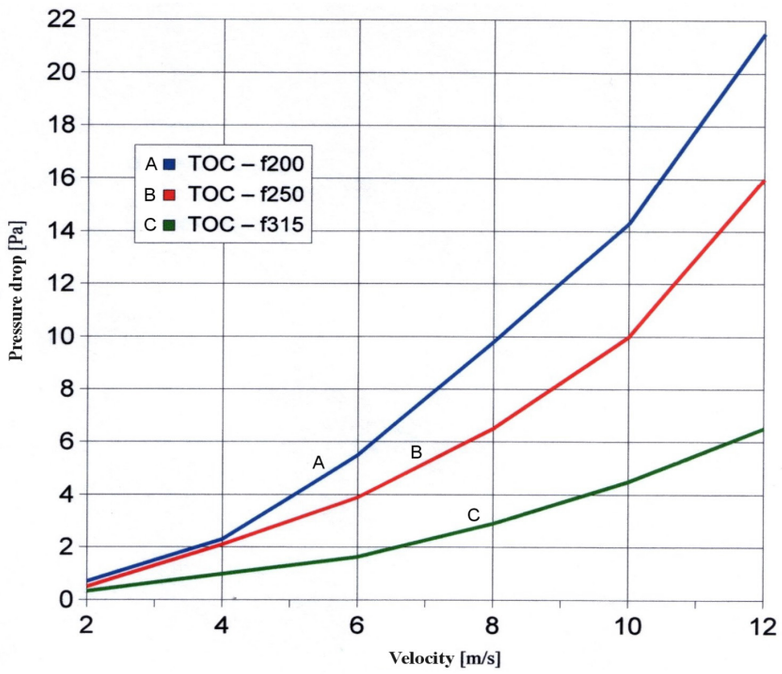

Noise silencer SLV100U

DESCRIPTION:

SLV100U silencer is designed for mounting in Spiro and B1 type installations. The attenuator housing is made of zinc-coated steel sheet. Mineral wool protected with perforated sheet is used as sound absorbing material. In a standard version, SLV100U attenuators are equipped with gaskets.

wt - attenuating layer. Glass wool insulation.

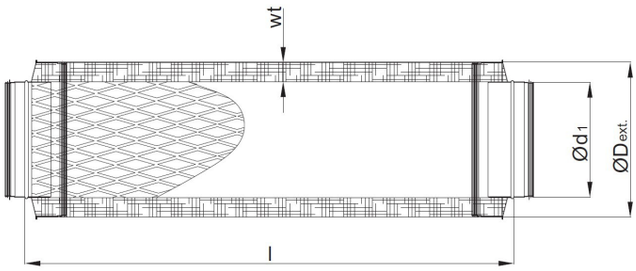

Range of SLV100U silencers with 100 mm insulation.

Type		Ød1 [mm]	ØD ext. [mm]	Insulation thickness [mm]	L [mm]	Weight [kg]*
SLVU	100/50	98	300	100	300/600/900/1200	3,6/5,7/7,6/9,8
SLVU	125/50	123	315	100	300/600/900/1200	3,9/6,1/8,4/10,6
SLVU	160/50	158	355	100	300/600/900/1200	4,5/7,1/9,6/12,2
SLVU	200/50	198	400	100	300/600/900/1200	5,4/8,3/11,2/14,1
SLVU	250/50	248	450	100	300/600/900/1200	6,6/10,5/14,2/17,8
SLVU	315/50	313	500	100	600/900/1200	12,2/16,3/20,4
SLVU	400/50	398	600	100	600/900/1200	15,2/20,2/25,1
SLVU	500/50	498	710	100	600/900/1200	20,0/25,9/31,8
SLVU	630/50	628	800	100	600/900/1200	23,1/30,0/36,8

Example hydraulic resistances of attenuators, length l = 900 mm.

Ordering example

SLV100U - d L / mat

Product CODE
SLV100U – with gasket
SLV100 – without gasket

100 – thickness of insulation wt

Diameter1 [mm]
Length [mm]

Material:
Galvanized steel DX51D+Z275 MA-C – no marking
Stainless steel X5CrNi18-10, AISI304 – 1.4301
Stainless steel X2CrNiMo17-12-2, AISI 316L – 1.4404
Aluminium alloy 5754 - AlMg3
Aluzinc – AZ185

Example: SLV100U-125 1200; SLV100U-160 300/1.4301

Noise silencer SLV100U

Acoustic characteristics of SLV100U with 100 mm attenuating layer.

			Octave band (Hz)									Mean total pressure loss coefficient
DN	D	L	63	125	250	500	1000	2000	4000	8000	Weight	
	(mm)	(mm)	Insertion attenuation (dB)								kg	(ζ/m)
80	280	300	4	13	13	16	36	46	43	13	2,9	0,374
80	280	600	4	15	21	33	47	50	45	23	5,1	
80	280	900	4	18	30	50	50	50	48	32	7,3	
80	280	1200	5	20	39	50	50	50	50	50	9,5	
100	300	300	3	12	14	22	33	36	34	10	3,2	0,286
100	300	600	4	14	18	29	39	44	39	18	5,6	
100	300	900	5	17	23	36	46	50	44	26	8	
100	300	1200	6	19	28	43	50	50	49	32	10,4	
125	315	300	2	12	18	22	23	22	19	12	3,8	0,22
125	315	600	3	13	19	31	33	34	29	17	6,7	
125	315	900	3	14	20	34	43	45	39	22	9,6	
125	315	1200	4	14	21	37	50	50	49	27	12,5	
140	355	300	2	10	14	21	20	19	16	10	4,3	0,163
140	355	600	3	11	16	28	30	31	26	14	7,5	
140	355	900	3	12	18	31	40	42	35	18	10,7	
140	355	1200	4	13	20	35	49	50	44	22	13,9	
150	355	300	2	8	11	21	18	18	15	8	4,3	0,176
150	355	600	3	9	14	26	28	29	23	12	7,6	
150	355	900	4	11	17	30	39	41	33	15	10,8	
150	355	1200	5	12	20	34	48	50	41	18	14,1	
160	355	300	2	7	8	20	16	16	13	7	4,4	0,163
160	355	600	3	8	12	24	26	27	21	10	7,7	
160	355	900	4	10	16	28	37	39	30	12	11	
160	355	1200	5	11	19	33	47	50	38	15	14,3	
180	400	300	1	5	7	16	14	13	12	8	4,5	0,14
180	400	600	2	6	10	20	24	24	17	10	7,9	
180	400	900	3	8	13	24	35	35	23	12	11,3	
180	400	1200	4	9	16	28	45	46	29	14	14,7	

Noise silencer SLV100U

Octave band (Hz)												Mean total pressure loss coefficient
DN	D	L	63	125	250	500	1000	2000	4000	8000	Weight	
	(mm)	(mm)	Insertion attenuation (dB)								kg	(ζ/m)
200	400	300	1	5	7	19	12	14	12	9	5,1	0,123
200	400	600	2	7	11	17	23	22	14	11	8,9	
200	400	900	3	9	15	23	32	35	17	13	12,7	
200	400	1200	4	12	18	26	46	45	28	22	16,5	
224	450	300	0	2	4	10	11	10	7	7	5,5	0,108
224	450	600	0	3	7	15	21	18	11	8	6,5	
224	450	900	4	8	15	24	36	30	16	12	13,4	
224	450	1200	5	10	18	29	46	36	23	18	17,4	
250	450	300	1	1	3	6	10	9	4	4	5,9	0,095
250	450	600	3	5	10	16	20	16	9	7	10,3	
250	450	900	4	6	14	24	30	24	14	10	14,7	
250	450	1200	5	7	17	31	45	32	18	13	19,1	
280	500	300	1	2	3	4	5	1	3	1	6,6	0,081
280	500	600	3	4	7	8	10	5	7	2	11,5	
280	500	900	5	7	11	13	17	10	12	4	16,3	
280	500	1200	8	11	18	21	33	27	16	10	21,2	
300	500	300	2	6	8	8	5	3	5	0	6,8	0,074
300	500	600	4	1	1	3	3	2	1	1	11,7	
300	500	900	7	1	2	4	6	4	2	2	16,7	
300	500	1200	7	4	11	21	31	26	16	10	21,7	
315	500	600	0	2	6	15	21	15	8	7	17,6	0,069
315	500	900	1	3	13	20	25	21	11	9	17,6	
315	500	1200	1	3	7	21	27	22	13	10	22,8	
355	560	600	1	2	6	16	19	14	7	6	8,6	0,061
355	560	900	1	2	6	16	19	14	5	4	14,4	
355	560	1200	1	2	6	15	19	11	5	4	20,1	
400	600	600	1	4	4	10	11	5	1	2	9,7	0,052
400	600	900	2	5	12	19	20	14	8	8	14,7	
400	600	1200	3	6	13	23	27	18	11	10	21	

Noise silencer SLV100U

Octave band (Hz)												Mean total pressure loss coefficient
DN	D	L	63	125	250	500	1000	2000	4000	8000	Weight	
	(mm)	(mm)	Insertion attenuation (dB)								kg	(ζ/m)
450	630	600	1	4	8	12	14	7	5	5	15,7	0,048
450	630	900	2	5	11	16	16	8	6	5	21	
450	630	1200	3	6	12	21	23	13	8	8	27,2	
500	710	600	1	1	3	8	9	2	3	2	17,4	0,039
500	710	900	2	2	5	12	14	3	4	2	23,3	
500	710	1200	2	2	6	16	18	4	5	3	30,2	
560	800	600	1	1	2	7	7	2	2	2	19,5	0,034
560	800	900	1	1	4	10	11	3	3	2	26,1	
560	800	1200	1	1	5	14	15	4	4	3	33,8	
600	800	900	1	1	4	8	7	2	2	2	20,9	0,031
600	800	1200	1	1	4	11	11	3	3	2	28	
630	800	900	1	1	4	11	11	3	3	2	36,3	0,03
630	800	1200	1	1	4	12	12	4	4	3	23,6	
710	900	900	2	3	9	13	5	2	3	2	31,5	0,029
710	900	1200	2	3	10	17	9	3	3	3	26,5	
800	1000	1200	3	3	10	15	7	3	3	4	29,9	0,023

Noise rectangular silencer LRCAV

DESCRIPTION:

LRCAV silencer consists of an outer jacket and take-offs made from galvanized steel sheets. They have a round nipple connection at both ends. The outer jacket is inside lined with sound-absorbing rock wool which is covered with black hygenic fibreglass fabric. Tightness class D.
In the standard version, silencers are made without a core to d 250 mm and with a core from d 315 mm.

Dimensions:

Diameter d 100mm to d 630mm in the lengths 300, 500, 600, 900, 1000, 1200 mm.

d 100 to 250 mm (without core):
d 315 to 630 mm (with core):

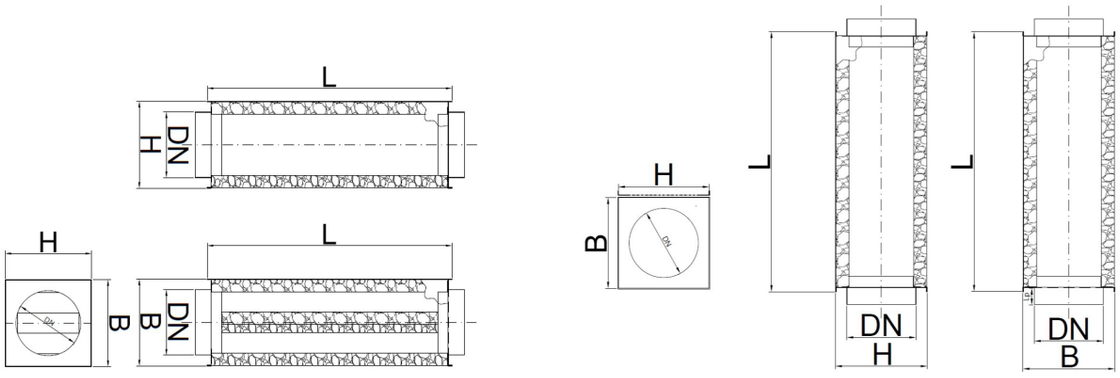

Ordering example

LRCAV - d L / mat

Product CODE
LRCAV – with gasket

Diameter1 [mm]
Length [mm]

Material:
Galvanized steel DX51D+Z275 MA-C – no marking

Example: LRCAV-100300; LRCAV-1601000

Noise rectangular silencer LRCAV

Dimensions, weight and acoustic characteristics:

				Octave band (Hz)								
DN	l	B	H	63	125	250	500	1000	2000	4000	8000	Weight
	(mm)	(mm)	(mm)	Insertion attenuation (dB)								kg
100	300	150	150	1	6	5	9	18	39	42	27	1,2
100	500	150	150	2	8	12	14	22	38	43	30	2,5
100	600	150	150	2	9	13	19	27	42	44	36	2,8
100	900	150	150	6	12	15	31	38	46	47	43	3,8
100	1000	150	150	9	14	16	38	45	50	48	46	4,2
100	1200	150	150	11	16	17	44	49	51	51	52	4,8
125	300	175	150	1	6	8	9	11	20	22	18	1,4
125	500	175	175	2	7	10	12	23	24	17	22	3,0
125	600	175	175	2	8	11	17	24	39	33	25	3,3
125	900	175	175	5	11	13	25	33	44	39	31	4,5
125	1000	175	175	9	13	14	28	41	47	35	34	5,0
125	1200	175	175	9	14	15	33	43	50	45	37	5,7
160	500	210	210	1	5	7	13	20	25	14	8	3,8
160	600	210	210	2	7	8	14	21	35	23	14	4,0
160	900	210	210	4	8	10	17	28	41	30	18	5,5
160	1000	210	210	7	9	13	20	24	43	33	22	5,9
160	1200	210	210	8	11	14	22	37	49	39	24	6,9
200	500	250	250	1	4	6	11	17	24	12	8	4,7
200	600	250	250	2	5	7	12	19	28	18	11	4,9
200	900	250	250	4	6	9	15	26	35	23	14	6,6
200	1000	250	250	6	7	11	18	30	37	26	16	7,1
200	1200	250	250	7	8	12	19	33	42	28	18	8,3
250	500	300	300	2	1	5	1	14	12	8	4	5,7
250	600	300	300	3	2	6	1	16	21	12	8	6,0
250	900	300	300	4	2	8	13	22	28	15	10	8,0
250	1000	300	300	5	3	10	15	24	30	17	11	11,0
250	1200	300	300	6	4	11	17	28	36	19	12	10,0

Noise rectangular silencer LRCAV

Dimensions, weight and acoustic characteristics:

				Octave band (Hz)								
DN	l	B	H	63	125	250	500	1000	2000	4000	8000	Weight
	(mm)	(mm)	(mm)	Insertion attenuation (dB)								kg
315	500	365	365	2	2	5	11	15	10	9	8	8,0
315	600	365	365	3	3	6	12	23	24	19	17	8,6
315	900	365	365	4	4	8	16	29	33	24	20	11,0
315	1000	365	365	5	4	9	17	30	36	25	20	12,5
315	1200	365	365	6	5	10	19	34	38	27	21	14,0
400	500	450	450	1	2	5	8	10	6	4	3	11,0
400	600	450	450	1	2	5	8	18	19	13	12	12,0
400	900	450	450	3	4	7	13	22	29	20	16	16,0
400	1000	450	450	5	4	8	14	24	31	21	17	17,0
400	1200	450	450	5	5	9	15	28	36	22	18	20,0
500	600	550	550	1	3	4	10	17	20	11	9	17,5
500	900	550	550	2	4	6	13	22	26	18	15	19,0
500	1200	550	550	3	5	8	15	27	32	21	16	24,0

Pressure loss vs Volumetric Flow per unit length

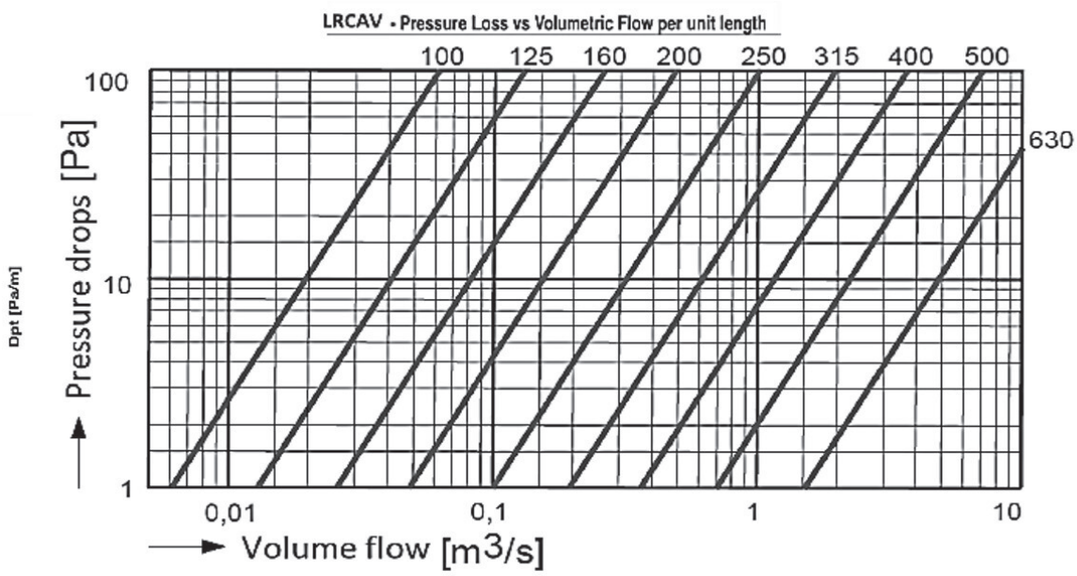

Noice silencer PVAPVU

DESCRIPTION:

PVAPVU noise suppressors are used to attenuate the noise transmitted by ventilation equipment. They are installed in ventilation ducts with a circular cross-section. They are characterised by very low flow resistances. The attenuator casing is made of zinc-coated steel sheet. The internal core is made of perforated steel sheet. The space between conduits is filled with attenuating material. In a standard version, the suppressor is equipped with rubber gasket.

Glass wool insulation. Gasket in standard version

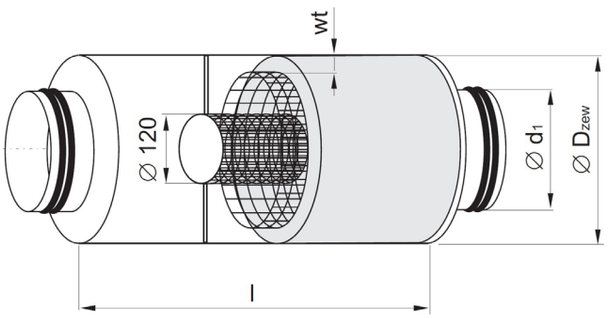

Acoustic characteristics of PVAPVU with 100mm attenuating layer.

Diameter Ød1 [mm]	Diameter ØDzew [mm]	Pef [m2]	l [mm]	Acoustic insulation thickness [mm]
400	600	0,102	600	100
400	600	0,102	900	100
500	700	0,165	600	100
500	700	0,165	900	100
630	830	0,279	600	100
630	830	0,279	900	100
800	1000	0,429	900	100
1000	1200	0,665	900	100

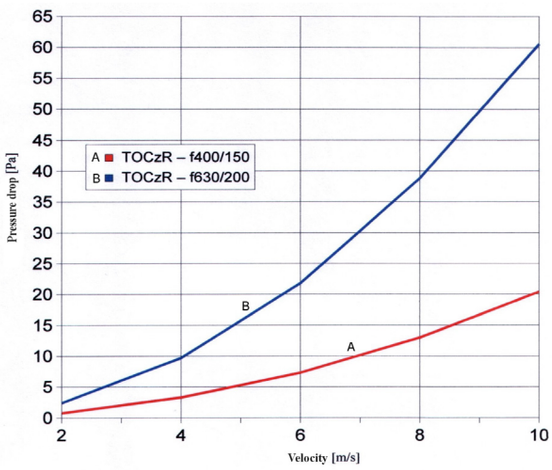

Example hydraulic resistances of attenuators, length l = 900 mm.

Ordering example

PVAPVU - d L / mat

Product CODE
PVAPVU – with gasket
PVAPV – without gasket

Diameter1 [mm]
Length [mm]

Material:
Galvanized steel DX51D+Z275 MA-C – no marking
Stainless steel X5CrNi18-10, AISI304 – 1.4301
Aluminium alloy 5754 - AlMg3

Example: PVAPVU-400600; PVAPVU-800900/1.4301

Attenuating bend BSLV50U, BSLV100U

DESCRIPTION:

BSLVU attenuating bend is used in such ventilating installations, where spatial conditions make it impossible to fit other suppressors. Provided with 50 or 100mm acoustic insulation. Glass wool insulation - ISOVER Ultimate U MFN 16.

Gasket in a standard version.

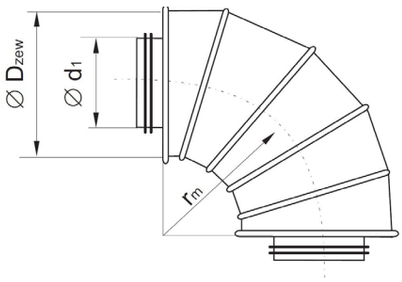

Example dimensions of BSLV50U attenuating bends with 50 mm-thick insulation.

Diameter Ød1 [mm]	Diameter ØDzew [mm]	Pef [m2]	l [mm]	Acoustic insulation thickness [mm]
125	224	2 d1	50	100
160	260	2 d1	50	100
200	315	2 d1	50	100
250	355	2 d1	50	100
315	450	2 d1	50	100
400	500	2 d1	50	100

Hydraulic resistances of BSLVU attenuating bends.

Ordering example

BSLV50U
BSLV100U - d / mat

Product CODE
BSLV50U/BSLV100U – with gasket
BSLV50/BSLV100 – without gasket

50/100 – thickness of insulation

Diameter [mm]

Material:
Galvanized steel DX51D+Z275 MA-C – no marking
Stainless steel X5CrNi18-10, AISI304 – 1.4301
Aluminium alloy 5754 - AlMg3

Example: BSLV50U-125; BSLV100U-160/1.4301

Attenuating bend BSLV50U, BSLV100U

Example dimensions of BSLV100U attenuating bends with 100 mm-thick insulation.

Diameter Ød1 [mm]	Diameter ØDzew [mm]	Pef [m2]	l [mm]	Acoustic insulation thickness [mm]
125	315	2 d1	100	100
160	355	2 d1	100	100
200	400	2 d1	100	100
250	450	2 d1	100	100
315	500	2 d1	100	100
400	600	2 d1	100	100
500	710	2 d1	100	100
630	850	2d1	100	100

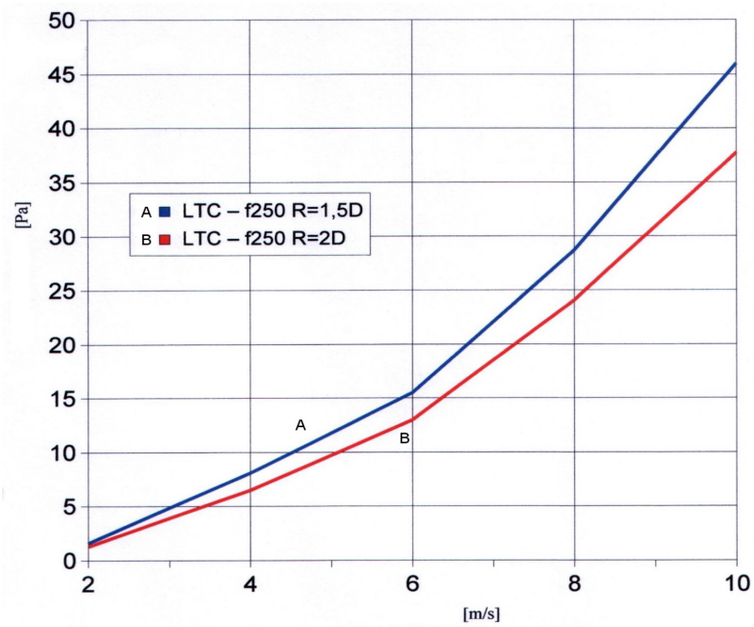

Damper POJCSVU, POJCNVU, POJCRVU

DESCRIPTION:

Manually operated POJCSVU, POJCNVU, POJCRVU type dampers are delivered in versions allowing the installation of an electric actuator. They are produced in three versions:

POJCSVU - hermetic, with rubber sealing along the perimeter of adjusting flap, used when it is necessary to fully cut off air flow.

POJCNVU - no adjusting flap sealing, used to control flow in pipe laterals.

POJCRVU - adjusting damper, makes it impossible to fully cut off air stream flow, used to control output - for example in expansion boxes or air inlets.

Gasket on connection stub.

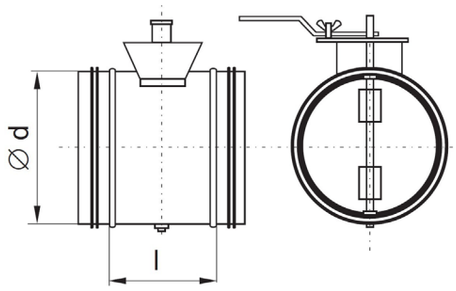

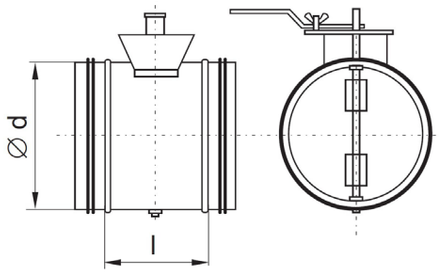

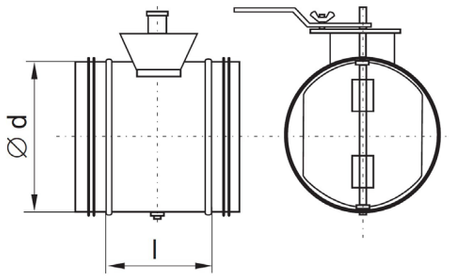

Ordering example

POJCNVU
POJCRVU
POJCSVU - d / mat

Product CODE
POJCNVU,POJCRVU,POJCSVU – with gasket
POJCNV,POJCRV,POJCSV – without gasket

Diameter [mm]

Material:
Galvanized steel DX51D+Z275 MA-C – no marking
Stainless steel X5CrNi18-10, AISI304 – 1.4301
Aluminium alloy 5754 - AlMg3
Aluzinc – AZ185

Example: POJCNVU-100; POJCSVU-160/1.4301

Damper PECSVU, PECNVU, PECRVU

DESCRIPTION:

Electrically operated PECSVU, PECNVU, PECRVU type dampers are made so as to allow them to be wrapped with insulation. They have brazen or steel bushes, which stabilise flap axis. They are used in the shipbuilding industry and have increased resistance to temperature.

These dampers are produced in three versions:

PECSVU - hermetic, with rubber sealing along the perimeter of adjusting flap, used when it is necessary to fully cut off air flow.

PECNVU - no adjusting flap sealing, used to control outputs in pipe laterals.

PECRVU- adjusting damper, makes it impossible to fully cut off air stream flow, used to control output - for example in expansion boxes or air inlets.

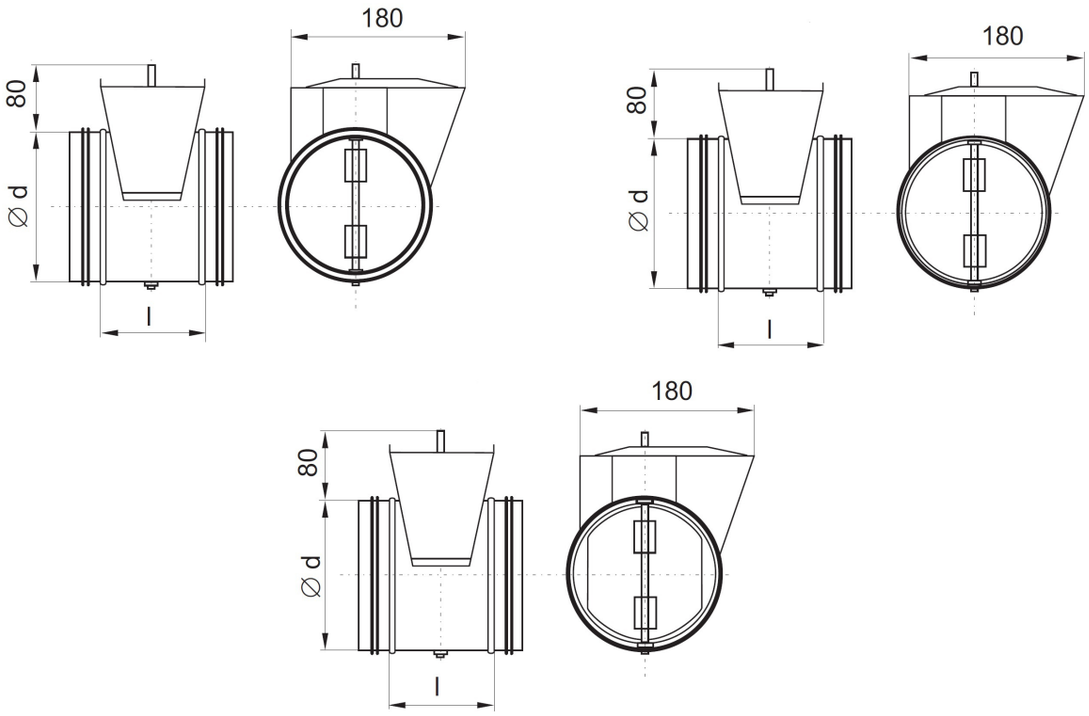

Ordering example

PECSVU
PECNVU
PECRVU - d / mat

Product CODE
PECSVU, PECNVU, PECRVU – with gasket
PECSV, PECNV, PECRV – without gasket

Diameter [mm]

Material:
Galvanized steel DX51D+Z275 MA-C – no marking
Stainless steel X5CrNi18-10, AISI304 – 1.4301
Aluminium alloy 5754 - AlMg3
Aluzinc – AZ185

Example: PECSVU-100; PECRVU-160/1.4301

Damper PRCSVU, PRCNVU, PRCRVU

DESCRIPTION:

Manually operated PRCSVU, PRCNVU, PRCRVU type dampers are made so as to allow them to be wrapped with insulation. They have brazen or steel bushes, which stabilise flap axis. They are used in the shipbuilding industry and have increased resistance to temperature.

These dampers are produced in three versions:

PRCSVU - hermetic, with rubber sealing along the perimeter of the adjusting flap, used when it is necessary to fully cut off air flow.

PRCNVU- no adjusting flap sealing, used to control outputs in pipe laterals.

PRCRVU- adjusting damper, makes it impossible to fully cut off air stream flow, used to control output - for example in air inlets.

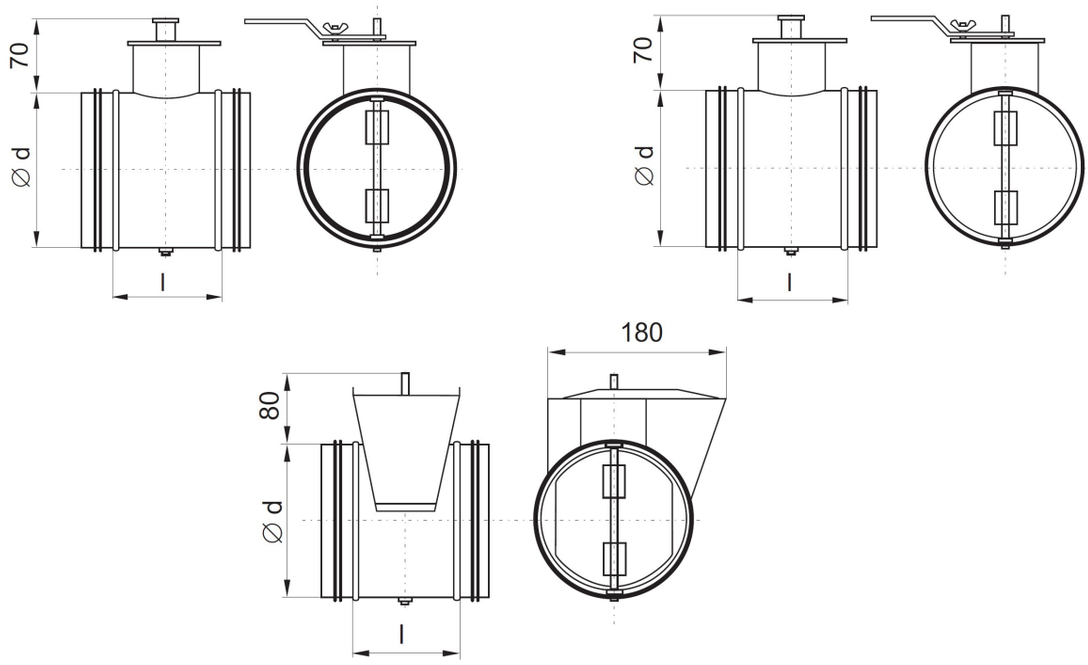

PRCSVU
PRCNVU
PRCRVU - d / mat

Ordering example

Product CODE
PRCSVU, PRCNVU, PRCRVU– with gasket
PRCSV, PRCNV, PRCRV – without gasket

Diameter [mm]

Material:
Galvanized steel DX51D+Z275 MA-C – no marking
Stainless steel X5CrNi18-10, AISI304 – 1.4301
Aluminium alloy 5754 - AlMg3
Aluzinc – AZ185

Example: PRCSVU-100; PRCRVU-160/1.4301

Example dimensions of dampers.

d [mm]	l [mm]	Weight [kg]			l [mm]	Weight [kg]				
		POJCSVU	POJCNVU	POJCRVU		PECSVU PRCSVU	PECNVU PRCNVU	PECRVU PRCRVU	Type	Torque [Nm]
100	100	0,6	0,5	0,5	110	0,8	0,7	0,6	LM...A	5
125	100	0,7	0,6	0,6	110	0,9	0,8	0,7	LM...A	5
160	100	0,9	0,8	0,7	110	1,0	1,0	0,8	LM...A	5
200	100	1,2	1,1	1,0	110	1,4	1,3	1,2	LM...A	5
250	100	1,8	1,5	1,4	160	2,0	1,7	1,6	LM...A	5
315	120	2,5	2,0	1,8	220	2,7	2,2	2,0	LM...A	5
400	150	3,6	2,7	2,7	260	3,8	2,9	2,9	NM...A	10
500	150	4,9	3,8	3,5	420	5,1	4,0	3,7	NM...A	10
630	180	7,8	5,8	5,2	510	8,0	6,1	5,4	SM...A	20

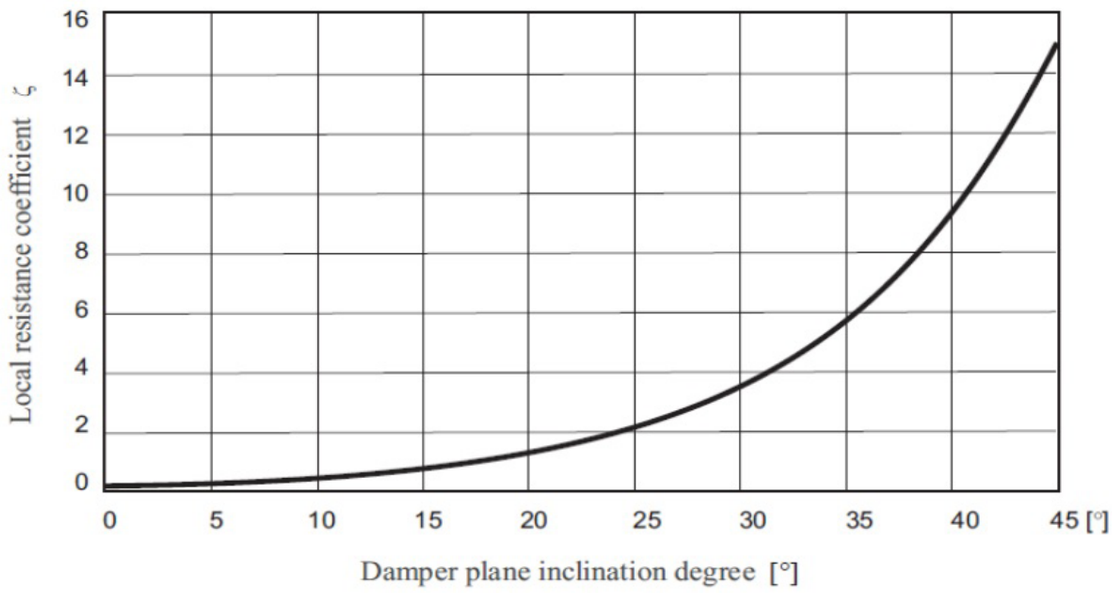

* Specified weights exclude actuator.
1 Manufactured upon order.

Relationship between local resistance coefficient and opening degree for single-leaf dampers - hermetic (s) and non-hermetic (n).

Damper DTUV, DSUV

DESCRIPTION:

Manually operated DTUV, DSUV type dampers are made with BD-cups. They are produced in two versions:

DTUV-hermetic with rubber sealing along the perimeter of adjusting flap, used when it is necessary to fully cut off airflow, Tightness class D

DSUV-no adjusting flap sealing used to control flow in pipe laterals

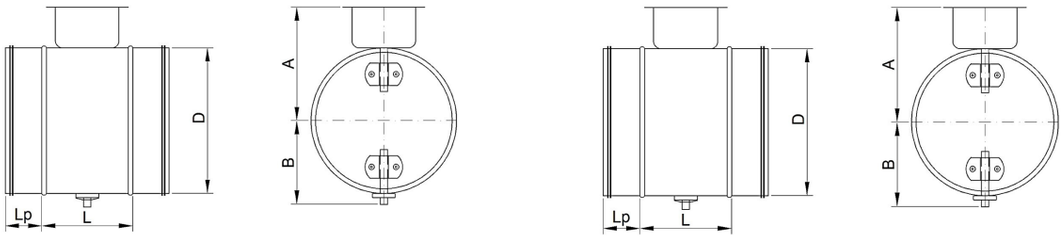

Dimensions:

Dimensions				
øD [mm]	L [mm]	Lp [mm]	A [mm]	B [mm]
100	100	40	95,0	63,0
125	100	40	107,5	75,5
160	100	40	125,0	93,0
200	100	40	145,0	113,0
250	120	60	170,0	138,0
315	120	60	202,5	172,5

Ordering example

DSUV
DTUV - d / mat

Product CODE
DSUV, DTUV - with gasket
DSV, DTV – without gasket

Diameter [mm]

Material:
Galvanized steel DX51 D+Z275 MA-C – no marking

Example: DSUV-100; DTUV-160

Non-return flap valve DOSVU

DESCRIPTION:

DOSVU non-return flap valve is designed for use in low- and medium-pressure ventilation systems. If there is no flow in the conduit, the flap with a shifted centre of gravity closes its cross-section under gravity. It is used in horizontal ducts.

DOSVU non-return flap valve is not designed for high-pressure dedusting systems.

Gasket in a standard version.

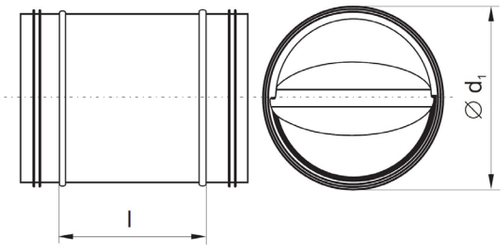

Example dimensions of DOSVU non-return flap valves.

d [mm]	l [mm]	Weight [kg]
80	130	0,4
100	130	0,5
125	130	0,6
160	130	0,8
200	130	1,0
250	250	1,9
315	250	2,4
400	250	3,0

Ordering example

DOSVU - d / mat

Product CODE
DOSVU – with gasket
DOSV – without gasket

Diameter [mm]

Material:
Galvanized steel DX51D+Z275 MA-C – no marking
Stainless steel X5CrNi18-10, AISI304 – 1.4301
Aluminium alloy 5754 - AlMg3

Example: DOSVU-400; DOSVU-100/1.4301

Stub pipe ILVU

DESCRIPTION:

Stub pipe allows the connection of the conduit with a round cross-section to a conduit with rectangular cross-section.

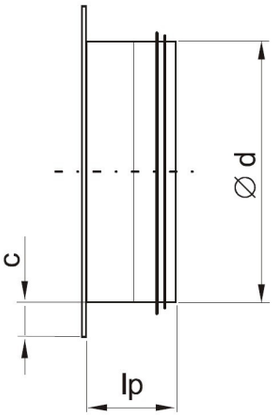

Available diameters of ILVU stub pipes.

d [mm]	l [mm]	Weight [kg]
100	13	0,1
125	13	0,1
160	13	0,1
200	15	0,2
250	15	0,3
315	15	0,3
400	15	0,6
500	15	0,8
630	15	1,0
800	15	2,0
1000	15	2,4
1250	15	5,0

Ordering example

ILVU - d / mat

Product CODE
ILVU – with gasket
ILV – without gasket

Diameter [mm]

Material:
Galvanized steel DX51D+Z275 MA-C – no marking
Stainless steel X5CrNi18-10, AISI304 – 1.4301
Stainless steel X2CrNiMo17-12-2, AISI 316L – 1.4404
Aluminium alloy 5754 - AlMg3
Aluzinc – AZ185

Example: ILVU-400; ILVU-100/1.4301

Stub pipe with screen and frame EPNFRVU

DESCRIPTION:

EPNFRVU stub pipe with screen and frame, used to terminate and protect pressure or suction conduits with screen sized:

12,5 x 12,5 x 1,2 mm.

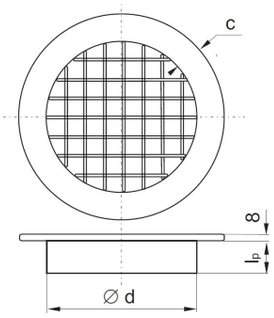

Available diameters of stub pipes with screen and frame EPNFRVU.

d [mm]	c [mm]	lp [mm]
100	25	40
125	25	40
160	25	40
200	35	40
250	35	40
315	35	60
400	35	80
500	35	80
630	35	80
800	35	100
1000	35	100
1250	35	120

Ordering example

EPNFRVU - d / mat

Product CODE
EPNFRVU – with gasket
EPNFRV – without gasket

Diameter [mm]

Material:
Galvanized steel DX51D+Z275 MA-C – no marking
Stainless steel X5CrNi18-10, AISI304 – 1.4301
Aluminium alloy 5754 - AlMg3

Example: EPNFRVU-400; EPNFRVU-100/1.4404

Stub pipes with screen EPNFVU

DESCRIPTION:

Application is the same as that of a stub pipe with a screen and frame, but cheaper since there is no frame.

Screen sized 10 x 10 mm.

lp - connection stub length

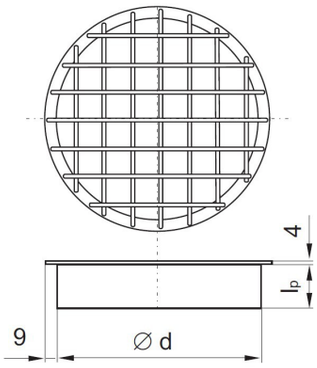

Available diameters of EPNFVU stub pipes.

d [mm]	lp [mm]
100	40
125	40
160	40
200	40
250	40
315	60
400	80
500	80
630	80
800	100
1000	100
1250	120

Ordering example

EPNFVU - d / mat

Product CODE
EPNFVU – with gasket
EPNFV – without gasket

Diameter [mm]

Material:
Galvanized steel DX51 D+Z275 MA-C – no marking
Stainless steel X5CrNi18-10, AISI304 – 1.4301
Aluminium alloy 5754 - AlMg3

Example: EPNFVU-400; EPNFVU-100/1.4301

Stub pipe with net and narrow edge EPNV

DESCRIPTION:

Description: EPNV stub pipe with net and narrow edge used to terminate and protect pressure or suction conduits with net sized 12,5 x 12x5 x 1 mm.

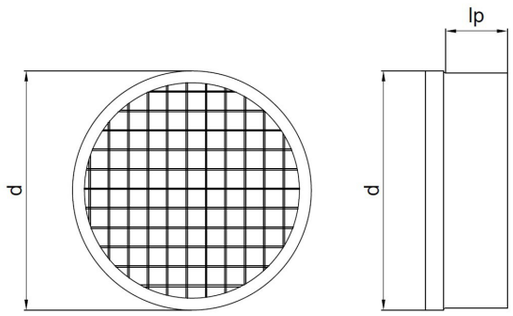

Available diameters of EPNV:

d [mm]	lp [mm]
100	40
125	40
160	40
200	40
250	60
315	60
400	80
450	80
500	80
630	80

Ordering example

EPNV - d / mat

Product CODE

Diameter [mm]

Material:
Galvanized steel DX51 D+Z275 MA-C – no marking

Example: EPNV-100; EPNV-250

Stub pipe with net and narrow edge EPMV

DESCRIPTION:

EPMV stub pipe with net and narrow edge used to terminate and protect pressure or suction conduits with net sized 12,5 x 12x5 x 1 mm.

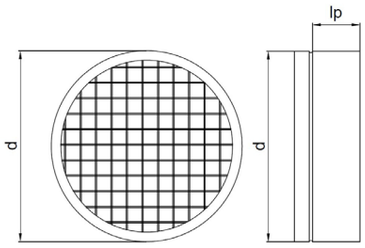

Available diameters of EPMV:

d [mm]	lp [mm]
100	40
125	40
160	40
200	40
250	60
315	60
400	80
450	80
500	80
630	80

Ordering example

EPMV - d / mat

Product CODE

Diameter [mm]

Material:
Galvanized steel DX51 D+Z275 MA-C – no marking

Example: EPMV-100; EPMV-400

External couplings MFV

DESCRIPTION:

MFV external couplings (muffs) are used to connect conduit system elements, when it is necessary to couple neighbouring fittings (e.g.: tee - bushing).

They are made without gaskets.

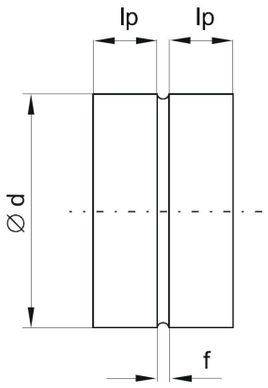

Example dimensions of MFV external couplings.

d [mm]	l [mm]	f [mm]	Weight [kg]]
100	40	6	0,2
125	40	6	0,2
160	40	6	0,3
200	40	6	0,4
250	60	6	0,4
315	60	6	0,7
400	80	8	1,4
500	80	8	1,7
630	80	8	2,7
800	100	12	4,9
1000	100	12	7,3
1250	120	12	9,2

Ordering example

MFV - d / mat

Product CODE
MFV – without gasket

Diameter [mm]

Material:
Galvanized steel DX51D+Z275 MA-C – no marking
Stainless steel X5CrNi18-10, AISI304 – 1.4301
Stainless steel X2CrNiMo17-12-2, AISI 316L – 1.4404
Aluminium alloy 5754 - AlMg3
Aluzinc – AZ185

Example: MFV-400; MFV-100/1.4301

Internal couplings NPVU

DESCRIPTION:

NPVU internal couplings (nipples) are used to connect conduits. They are made either with or without a gasket.

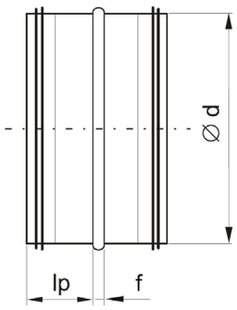

Example dimensions of NPVU internal couplings.

d [mm]	f [mm]	Weight [kg]
100	6	0,2
125	6	0,2
160	6	0,3
200	6	0,4
250	6	0,5
315	6	0,8
400	8	1,5
500	8	1,9
630	8	2,9
800	12	5,1
1000	12	7,7
1250	12	9,5

Ordering example

NPVU - d / mat

Product CODE
NPVU – with gasket

Diameter [mm]

Material:
Galvanized steel DX51 D+Z275 MA-C – no marking
Stainless steel X5CrNi18-10, AISI304 – 1.4301
Stainless steel X2CrNiMo17-12-2, AISI 316L – 1.4404
Aluminium alloy 5754 - AlMg3
Aluzinc – AZ185

Example: NPVU-400; NPVU-100/1.4301

KES

DESCRIPTION:

Flexible connection KES is used in ventilation systems to reduce transmission of vibrations between particular duct sections. KES is reducing noise and the possibility of damages, which could occur - like unsealing the connections of ducts.

A flexible connection is made from components such as:

- Hose Clamp
- Fibreglass covered from one side with silicone

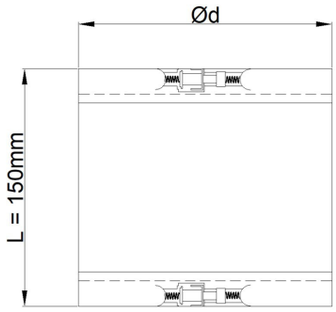

Dimensions:

Diameter d [mm]	
DN	80
DN	100
DN	125
DN	160
DN	200
DN	250
DN	315
DN	400
DN	500
DN	630
DN	800

Ordering example

KES - d

Product CODE

Diameter [mm]

Example: KES-400; KES-100

Pipe stoppers ESVU

DESCRIPTION:

Designed for mounting at the conduit end in order to provide a tight closing. It may work as a clean out for conduit cleaning. The length (depth) of pipe stoppers are the same as in the case of connection stubs. In a standard version made as a nipple, it may be also be provided in the form of a muff. On request, a grip may be mounted onto pipe stopper surface.

EPFV - pipe stopper muff with gasket.

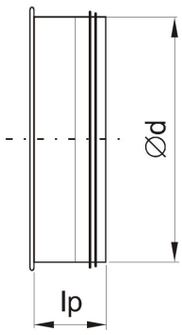

Diameters of pipe stoppers.

d [mm]	lp [mm]
100	40
125	40
160	40
200	40
250	40
315	60
400	80
500	80
630	80
800	100
1000	100
1250	120

Ordering example

ESVU - d / mat

Product CODE
ESVU – with gasket
ESV – without gasket

Diameter [mm]

Material:
Galvanized steel DX51 D+Z275 MA-C – no marking
Stainless steel X5CrNi18-10, AISI304 – 1.4301
Aluminium alloy 5754 - AlMg3

Example: ESVU-400; ESVU-100/1.4301

Air intakes CSBV

DESCRIPTION:

CSBV air intakes (B type - round) are used to terminate conduits with a circular cross- section. They should be used with small air flow velocities. B type intakes are equipped with fixed shutters installed at an angle of 45 degrees, which protect the intake hole against precipitation. Behind the shutters is a protective screen with a perforated sheet sized 8 x 8 mm up to diameter 315, and 10x10mm for a higher diameter.

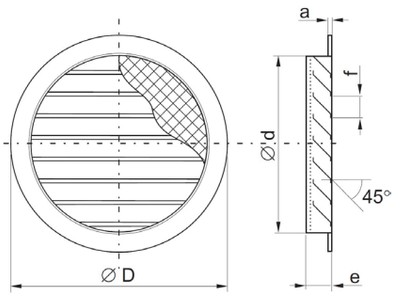

Diameters of wall intakes, round CSBV

d [mm]	e [mm]	f [mm]	g [mm]	a [mm]	P ef. [m2]
100	40	15	20	5	0,005
125	40	20	25	5	0,008
160	40	25	25	5	0,013
200	40	25	25	5	0,020
250	60	30	30	10	0,032
315	60	30	30	10	0,055
400	60	60	30	10	0,063
500	60	60	30	10	0,104
630	60	60	30	10	0,169
800	60	60	40	10	0,274
1000	60	60	40	10	0,442
1250	60	60	40	10	0,701

Ordering example

CSBV - d / mat/RAL

Product CODE
CSBV – without gasket

Diameter [mm]

Material:
Galvanized steel DX51D+Z275 MA-C – no marking
Stainless steel X5CrNi18-10, AISI304 – 1.4301

Painting:
RALcolor; color – number of color from RAL color pallette

Example: CSBV-400/RAL9005; CSBV-100

Air intakes YGCV/AlMg3

DESCRIPTION:

Round air intakes are used to terminate conduits with a circular cross-section. They should be used with small airflow velocities. Intakes are equipped with fixed shutters installed at an angle of 45o, which protect the intake hole against precipitation. Behind the shutters is a protective screen with a mesh sized 12.5 x 12.5 mm.

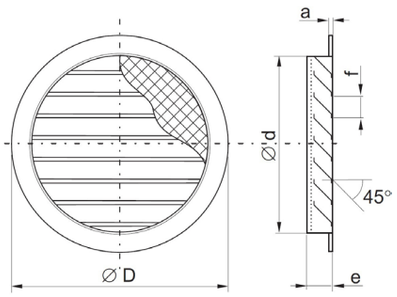

Dimensions:

d [mm	e [mm]	f [mm]	g [mm]	a [mm]	Af [m2]
100	40	15	20	5	0,004
125	40	20	25	5	0,007
150	40	25	25	5	0,011
160	40	25	25	5	0,012
200	40	25	25	5	0,020
250	60	30	30	10	0,029
315	60	30	30	10	0,045
400	60	60	30	10	0,075

Ordering example

YGCV - d / AlMg3 /RAL

Product CODE
YGCV – without gasket

Diameter [mm]

Material:
Aluminium alloy 5754 - AlMg3

Painting:
RALcolor; color – number of color
from RAL color pallette

Example: YGCV-400/AlMg3/ RAL9005; YGCV-100/AlMg3

Air intakes YGCV/AlMg3

Sound power level LWA[dB(A)]:

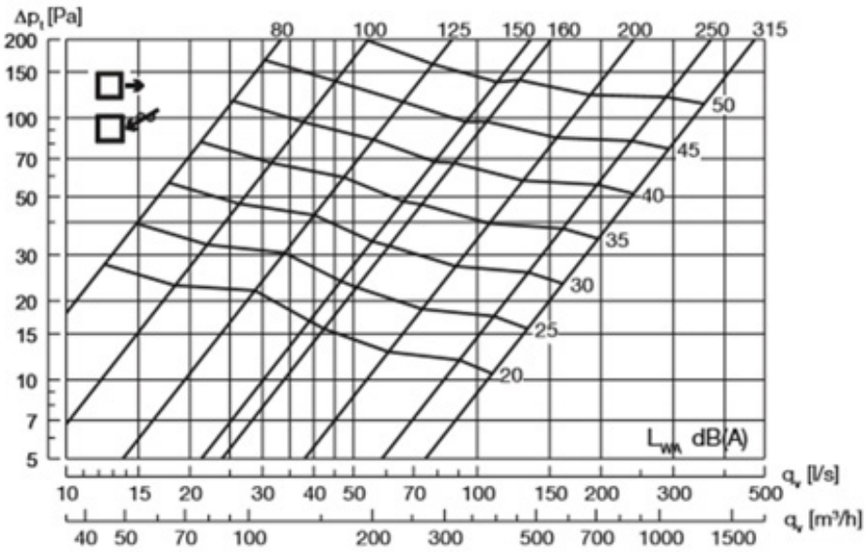

For sound pressure level at distance X [m]:
LpA = LWA - K, see table below:

X [m]	1	2	3	4	5	10	20
K [dB]	- 5	- 12	- 15	- 17	- 19	- 25	- 30

Roof intakes KHV

DESCRIPTION:

KHV roof intakes are used to terminate ventilation ducts. They may be combined with circular cross-section conduits, or using an adapter - with rectangular cross-section conduits.
These intakes may work as exhaust vents.

d coupling is made as a nipple.

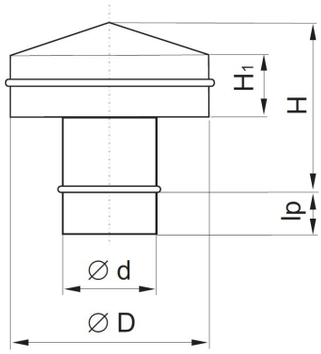

Dimensions of KHV roof intakes.

d [mm]	D [mm]	H1 [mm]	H [mm]
100	180	60	135
125	224	60	140
160	290	60	148
200	360	100	198
250	405	100	230
315	570	100	245
400	720	150	338
500	900	200	410
630	1135	200	440
800	1440	200	505
1000	1820	220	575
1250	2280	220	610

Ordering example

KHV - d / mat/RAL

Product CODE
KHV – without gasket

Diameter [mm]

Material:
Galvanized steel DX51 D+Z275 MA-C – no marking
Stainless steel X5CrNi18-10, AISI304 – 1.4301
Aluminium alloy 5754 - AlMg3

Painting:
RALcolor; color – number of color from RAL color pallette

Example: KHV-400; KHV-100/1.4301

Stub pipe KWV

DESCRIPTION:

KWV exhaust - intake stub pipe terminates a round conduit, and is designed for wall mounting.
It is provided with a rain protection element. The screen is made of a perforated zinc coated sheet with a mesh sized 10 x 10 mm. Mounted on the wall, may work either as an exhaust vent or an intake.

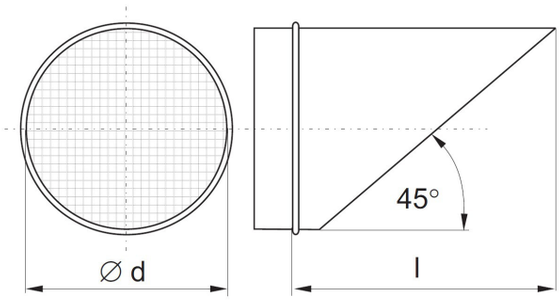

Dimensions of KWV exhaust stub pipes.

d [mm]	l [mm]
100	200
125	225
160	260
200	300
250	350
315	415
400	500
500	600
630	730
800	900
1000	1100
1250	1350

Ordering example

KWV - d / mat/RAL

Product CODE
KWV – without gasket

Diameter [mm]

Material:
Galvanized steel DX51D+Z275 MA-C – no marking
Stainless steel X5CrNi18-10, AISI304 – 1.4301
Aluminium alloy 5754 - AlMg3

Painting:
RALcolor; color – number of color from RAL color pallette

Example: KWV-400; KWV-100/1.4301

Lamella intake VHLV

DESCRIPTION:

VHLV lamella intakes are used to terminate ventilation ducts with circular crosssections. They may be used as field exhaust vents and as exhaust vents. Ød coupling made as a nipple.

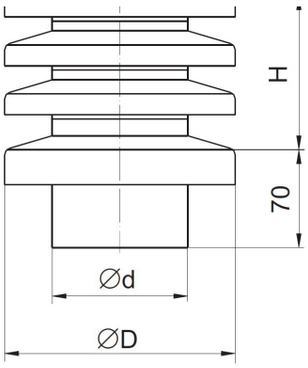

Dimensions:

d [mm]	D [mm]	H [mm]
100	165	110
125	205	145
160	255	180
200	320	250
250	320	250
300	405	280
315	405	290
400	505	370
500	635	410

Ordering example

VHLV - d / mat/RAL

Product CODE
VHLV – without gasket

Diameter [mm]

Material:
Galvanized steel DX51D+Z275 MA-C – no marking
Stainless steel X5CrNi18-10, AISI304 – 1.4301

Painting:
RALcolor; color – number of color from RAL color pallette

Example: VHLV-400/RAL9005; VHLV-100/1.4301

Intake VHAVU

DESCRIPTION:

VHAVU intakes are used to terminate ventilation ducts with a circular cross-section.
They may be used as field exhaust vents. Ød1 coupling made as a nipple, ØD coupling made as a muff.

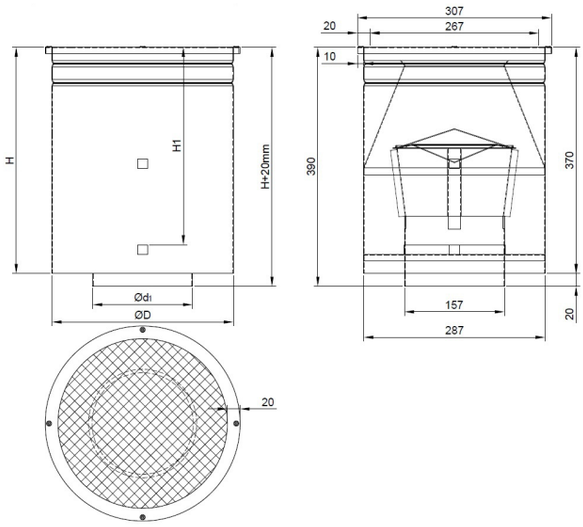

Dimensions:

Code	DN [mm]	Ød1 [mm]	ØD [mm]	H [mm]	H1 [mm]
VHAVU125257	125	123	257	290	230
VHAVU160287	160	157	287	370	310
VHAVU200322	200	197	322	440	380
VHAVU250407	250	247	407	497	437
VHAVU315457	315	312	457	600	540
VHAVU400568	400	395	568	760	700

Ordering example

VHAVU - d / mat/RAL

Product CODE
VHAVU – without gasket

Diameter [mm]

Material:
Galvanized steel DX51 D+Z275 MA-C – no marking

Painting:
RALcolor; color – number of color from RAL color pallette

Example: VHAVU-400; VHVU-100/1.4301

Wall intake CSAV

DESCRIPTION:

CSAV wall intakes are used in mechanical ventilation systems to terminate rectangular intake holes located in the exterior wall of a building. The wall intakes are equipped with fixed shutters, which protect the intake hole from precipitation, and a screen with a mesh sized 10 x 10 mm. Air intake clearance dimensions are 10mm lower than the dimensions of the conduit in which it is to be mounted.

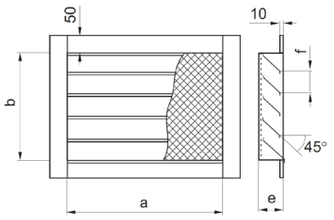

Example dimensions:

Air intake clearance a x b [mm]]	D1 [mm]	H [mm]	h1 [mm]	h2 [mm]	dp [cal]
190 x 190	82,5/100	490 x 490	82,5/100	990 x 620	82,5/100
190 x 305	82,5/100	490 x 620	82,5/100	990 x 790	82,5/100
190 x 390	82,5/100	490 x 790	82,5/100	990 x 990	82,5/100
305 x 190	82,5/100	490 x 990	82,5/100	990 x 1240	82,5/100
305 x 305	82,5/100	620 x 390	82,5/100	990 x 1490	82,5/100
305 x 390	82,5/100	620 x 490	82,5/100	990 x 1990	82,5/100
305 x 490	82,5/100	620 x 620	82,5/100	1240 x 790	82,5/100
305 x 620	82,5/100	620 x 790	82,5/100	1240 x 990	82,5/100
390 x 190	82,5/100	620 x 990	82,5/100	1240 x 1240	82,5/100
390 x 305	82,5/100	620 x 1240	82,5/100	1240 x 1490	82,5/100
390 x 390	82,5/100	790 x 490	82,5/100	1240 x 1990	82,5/100
390 x 490	82,5/100	790 x 620	82,5/100	1490 x 990	82,5/100
390 x 620	82,5/100	790 x 790	82,5/100	1490 x 1240	82,5/100
390 x 790	82,5/100	790 x 990	82,5/100	1490 x 1490	82,5/100
490 x 305	82,5/100	790 x 1240	82,5/100	1490 x 1990	82,5/100
490 x 390	82,5/100	790 x 1490	82,5/100	1990 x 1990	82,5/100

Ordering example

CSAV - AxB / mat/RAL

Product CODE
CSAV – without gasket

Conduit dimensions [mm]

Material:
Galvanized steel DX51 D+Z275 MA-C – no marking
Stainless steel X5CrNi18-10, AISI304 – 1.4301
Aluminium alloy 5754 - AlMg3

Painting:
RALcolor; color – number of color from RAL color pallette

Example: CSAV-200x200; CSAV-100x300/1.4301

Roof exhaust HFV

DESCRIPTION:

HFV roof exhaust vents (E type) are used to terminate ventilation ducts. The exhaust vent design allows the intensification of the gravitational movement of air during fan inactivity. The exhaust vent is equipped with an insert for collecting rainwater and carrying it outside, which prevents water penetration into the system. In a standard version, exhaust vents are made with muff mounting to d 400 mm, flange connection from d 400 mm.

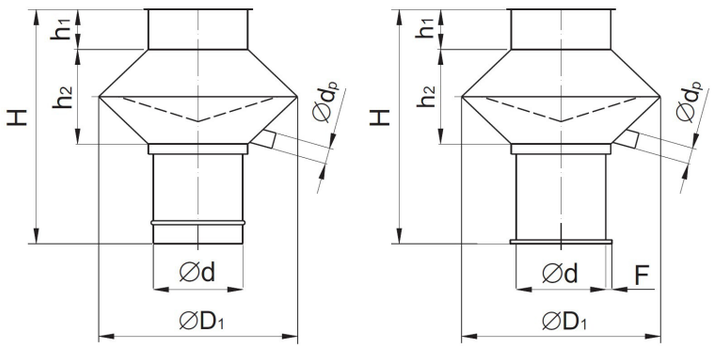

Dimensions of HFV roof exhaust vents.

d [mm]	D1 [mm]	H [mm]	h1 [mm]	h2 [mm]	dp [cal]
100	200	290	40	150	1/2
125	250	320	40	180	1/2
160	320	355	40	215	3/4
200	400	460	40	270	3/4
250	500	530	40	340	3/4
315	630	625	50	425	3/4
355	710	730	50	480	1

D [mm]	D1 [mm]	F [mm]	H [mm]	h1 [mm]	h2 [mm]	dp [cal]
400	800	25	790	50	540	1
500	1000	25	925	50	675	1
630	1260	30	1160	60	850	1
800	1600	30	1440	60	1080	1
1000	2000	35	1710	60	1350	1
1250	2500	35	2010	60	1600	1

Ordering example

HFV - d / mat/RAL

Product CODE
HFV – without gasket

Diameter [mm]

Material:
Galvanized steel DX51D+Z275 MA-C – no marking
Stainless steel X5CrNi18-10, AISI304 – 1.4301
Aluminium alloy 5754 - AlMg3

Painting:
RALcolor; color – number of color from RAL color pallette

Example: HFV-400; HFV-100/1.4301

Roof exhaust HNV

DESCRIPTION:

HNV roof exhaust vents (E type) are used to terminate ventilation ducts.
The exhaust vent design allows the intensification of the gravitational movement of air during fan inactivity. The exhaust vent is equipped with an insert for collecting rainwater and carrying it outside, which prevents water penetration into the system. In a standard version, exhaust vents are made with muff mounting to d 400 mm, flange connection from d 400 mm.

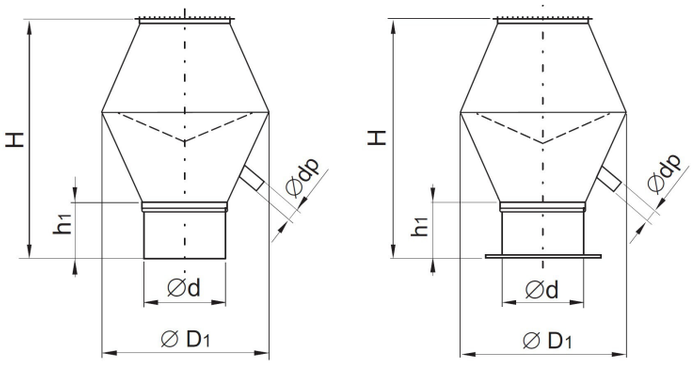

Dimensions of HNV roof exhaust vents.

d [mm]	D1 [mm]	H [mm]	h1 [mm]	dp [cal]
100	185	220	40	1/2
125	230	240	60	1/2
160	285	340	60	3/4
200	350	420	60	3/4
250	435	505	60	3/4
315	555	620	60	3/4

d [mm]	D1 [mm]	H [mm]	h1 [mm]	dp [cal]
400	685	825	70	1
500	865	975	70	1
630	1080	1220	70	1
800	1365	1530	90	1
1000	1605	1985	90	1
1250	2025	2455	90	1

Ordering example

HNV - d / mat/RAL

Product CODE
HNV – without gasket

Diameter [mm]

Material:
Galvanized steel DX51 D+Z275 MA-C – no marking
Stainless steel X5CrNi18-10, AISI304 – 1.4301
Aluminium alloy 5754 - AlMg3

Painting:
RALcolor; color – number of color from RAL color pallette

Example: HNV-400; HNV-100/1.4301

NOTEBOOK

NOTEBOOK

NOTEBOOK

CONTACT US!

Ewa Gawin
phone: +48 695 348 695
E-mail : ewa.gawin@venttrade.eu

Mateusz Troszczynski
phone: +48 695 658 695
E-mail : mateusz.troszczynski@venttrade.eu

Address: Jaśkowa Dolina 15/15, 80-252 Gdańsk, Poland

www.venttrade.eu